In the Matter of

Certain Coaxial Cable Connectors and Components Thereof and Products Containing Same

Investigation No. 337-TA-650

Publication 4283 **November 2011**

U.S. International Trade Commission

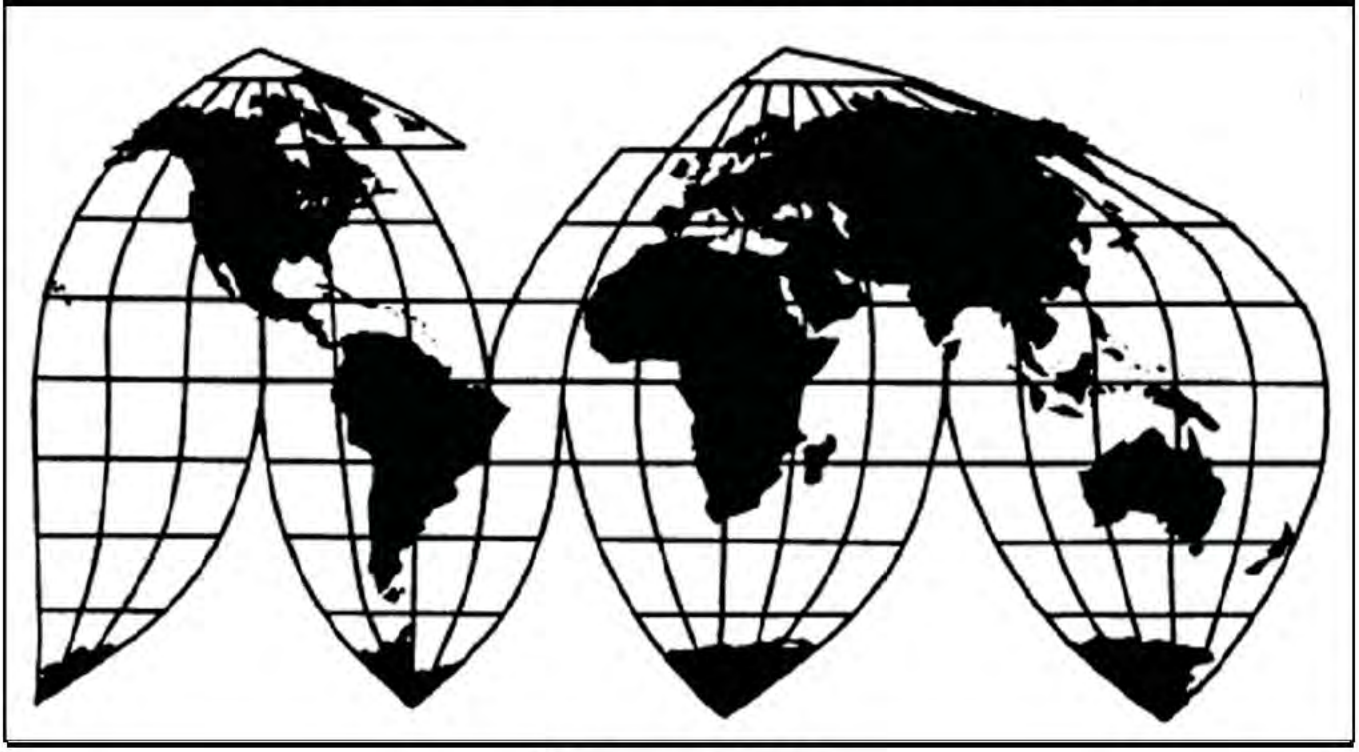

Washington, DC 20436

U.S. International Trade Commission

COMMISSIONERS

Deanna Tanner Okun, Chairman
Irving A. Williamson, Vice Chairman
Charlotte R. Lane
Daniel R. Pearson
Shara L. Aranoff
Dean A. Pinkert

Address all communications to
Secretary to the Commission
United States International Trade Commission
Washington, DC 20436

U.S. International Trade Commission

Washington, DC 20436
www.usitc.gov

In the Matter of

Certain Coaxial Cable Connectors and Components Thereof and Products Containing Same

Investigation No. 337-TA-650

Publication 4283

November 2011

UNITED STATES INTERNATIONAL TRADE COMMISSION
Washington, D.C.

In the Matter of **CERTAIN COAXIAL CABLE CONNECTORS AND COMPONENTS THEREOF AND PRODUCTS CONTAINING SAME**	**Investigation No. 337-TA-650**

NOTICE OF ISSUANCE OF A GENERAL EXCLUSION ORDER FOR U.S. PATENT NO. 5,470,257

AGENCY: U.S. International Trade Commission.

ACTION: Notice.

SUMMARY: Notice is hereby given that the U.S. International Trade Commission has determined to issue a general exclusion order for U.S. Patent No. 5,470,257 ("the '257 patent") following a remand from the United States Court of Appeals for the Federal Circuit ("Federal Circuit") in *John Mezzalingua Associates v. Int'l Trade Comm'n*, 2011 U.S. App. LEXIS 8806 (Fed. Cir. Apr. 28, 2011).

FOR FURTHER INFORMATION CONTACT: Michelle Klancnik, Office of the General Counsel, U.S. International Trade Commission, 500 E Street, S.W., Washington, D.C. 20436, telephone (202) 708-5468. Copies of non-confidential documents filed in connection with this investigation are or will be available for inspection during official business hours (8:45 a.m. to 5:15 p.m.) in the Office of the Secretary, U.S. International Trade Commission, 500 E Street, S.W., Washington, D.C. 20436, telephone (202) 205-2000. General information concerning the Commission may also be obtained by accessing its Internet server at *http://www.usitc.gov*. The public record for this investigation may be viewed on the Commission's electronic docket (EDIS) at *http://edis.usitc.gov*. Hearing-impaired persons are advised that information on this matter can be obtained by contacting the Commission's TDD terminal on (202) 205-1810.

SUPPLEMENTARY INFORMATION: The Commission instituted this investigation on May 30, 2008, based on a complaint filed by John Mezzalingua Associates, Inc. d/b/a PPC, Inc. of East Syracuse, New York ("PPC"). 73 *Fed. Reg.* 31145 (May 30, 2008). The complaint alleged violations of section 337 of the Tariff Act of 1930 (19 U.S.C. § 1337) in the importation into the United States, the sale for importation, and the sale within the United States after importation of certain coaxial cable connectors and components thereof and products containing the same by reason of infringement of various United States Patents, including the '257 patent. The complaint named eight respondents. After institution, two respondents were terminated based on consent orders and four respondents were found to be in default ("defaulting respondents"). Two respondents, Fu-Ching Technical Industry, Co., Ltd. and Gem Electronics, Inc. ("the active respondents"), remained active.

On October 13, 2009, the presiding administrative law judge issued a final initial determination ("ID") and a recommended determination on remedy and bonding. The Commission determined to review the final ID in part.

On March 31, 2010, the Commission found no violation of section 337 for the '257 patent. The Commission found infringement of the '257 patent by the defaulting respondents and no infringement by the active respondents. The Commission nevertheless found no violation of section 337 because it found no domestic industry for the '257 patent. Having found no violation, the Commission did not make a remedy determination for the '257 patent.

Complainant PPC appealed to the Federal Circuit. In *John Mezzalingua Associates v. International Trade Commission*, 2011 U.S. App. LEXIS 8806 (Fed. Cir. Apr. 28, 2011), the Federal Circuit reversed the Commission's finding of no violation, entered a judgment of violation, and remanded the investigation to the Commission for proceedings consistent with its opinion. The Federal Circuit's mandate issued on June 30, 2011.

On July 18, 2011, the Commission issued a notice requesting comments from the parties regarding how to proceed with the investigation following the remand from the Federal Circuit. On July 29, 2011, PPC filed a response to the Commission's notice. On August 1, 2011, the Commission investigative attorney filed a response to the Commission's notice.

Having reviewed the record to the investigation including all relevant submissions, the Commission has determined that the appropriate form of remedy is a general exclusion order. The general exclusion order prohibits the unlicensed entry of coaxial cable connectors and components thereof and products containing the same that infringe claim 1 and/or 5 of the '257 patent.

The Commission further determined that the public interest factors enumerated in section 337(d) (19 U.S.C. § 1337(d)) do not preclude issuance of the general exclusion order. Finally, the Commission determined that the amount of bond during the Presidential review period (19 U.S.C. § 1337(j)) shall be in the amount of thirteen (13) cents per coaxial connector of the defaulting respondents—Hanjiang Fei Yu Electronics Equipment Factory of China, Zhongguang Electronics of China, Yangzhou Zhongguang Electronics Co. of China, and Yangzhou Zhongguang Foreign Trade Co. Ltd. of China. A bond in the amount of zero is required for any other coaxial cable connector or component thereof or product containing the same covered by the general exclusion order. The Commission's order was delivered to the President and the United States Trade Representative on the day of its issuance.

The authority for the Commission's determination is contained in section 337 of the Tariff Act of 1930, as amended (19 U.S.C. § 1337), and in Part 210 of the Commission's Rules of Practice and Procedure (19 C.F.R. Part 210).

By order of the Commission.

James R. Holbein
Secretary to the Commission

Issued: September 13, 2011

UNITED STATES INTERNATIONAL TRADE COMMISSION
Washington, D.C.

In the Matter of **CERTAIN COAXIAL CABLE CONNECTORS AND COMPONENTS THEREOF AND PRODUCTS CONTAINING SAME**	**Investigation No. 337-TA-650**

GENERAL EXCLUSION ORDER

The Commission has determined that there is a violation of section 337 of the Tariff Act of 1930 (19 U.S.C. § 1337) in the unlawful importation and sale by Hanjiang Fei Yu Electronics Equipment Factory, Zhongguang Electronics, Yangzhou Zhongguang Electronics Co., Ltd., and Yangzhou Zhongguang Foreign Trade Co., Ltd., each of Yangzhou, China ("the Respondents") of certain coaxial cable connectors that infringe one or more of claims 1 and 5 of U.S. Patent No. 5,470,257 ("the '257 patent"). Having reviewed the record in this investigation, including the written submissions of the parties, the Commission has made a determination on the issues of remedy, the public interest, and bonding for the '257 patent. The Commission has determined that a general exclusion from entry for consumption is the appropriate remedy because there is a pattern of violation of section 337 and it is difficult to identify the source of infringing products under 19 U.S.C. § 1337(d). Accordingly, this Order prohibits the unlicensed importation of infringing coaxial cable connectors and components thereof and products containing the same infringing claims 1 and/or 5 of the '257 patent.

The Commission has also determined that the public interest factors enumerated in 19 U.S.C. §§ 1337(d) do not preclude the issuance of the general exclusion order, and that the bond

during the Presidential review period shall be in the amount of 13 cents per unit for Respondents' coaxial cable connectors and in the amount of zero for any other coaxial cable connectors covered by this General Exclusion Order.

Accordingly, the Commission hereby **ORDERS** that:

1. Coaxial cable connectors that infringe one or more of claims 1 and 5 of U.S. Patent No. 5,470,257 are excluded from entry for consumption, entry for consumption from a foreign-trade zone, or withdrawal from a warehouse for consumption, for the remaining term of the patent, except under license of the patent owner or as provided by law. Products of Fu-Ching Technical Industry Co., Ltd. and Gem Electronics, Inc. that were subject to investigation in the above-captioned investigation are not covered by this order. *See Certain Coaxial Cable Connectors and Components Thereof and Products Containing Same*, Inv. No. 337-TA-650, Comm'n Op. at 32-35 (Apr. 14, 2010).

2. Notwithstanding paragraph 1 of this Order, the aforesaid coaxial cable connectors are entitled to entry into the United States for consumption, entry for consumption from a foreign-trade zone, or withdrawal from a warehouse for consumption, under bond in the amount of 13 cents per imported coaxial cable connector of Respondents and otherwise under bond in the amount of zero, from the day after this Order is received by the United States Trade Representative as delegated by the President, 70 *Fed. Reg.* 43251 (July 21, 2005), until such time as the United States Trade Representative notifies the Commission that this action is approved or disapproved but, in any event, not later than sixty (60) days after the date of receipt of this action.

3. At the discretion of U.S. Customs and Border Protection ("CBP") and pursuant to procedures it establishes, persons seeking to import coaxial cable connectors that are potentially subject to this Order may be required to certify that they are familiar with the terms of this Order, that they have made appropriate inquiry, and thereupon state that, to the best of their knowledge and belief, the products being imported are not excluded from entry under paragraph 1 of this Order. At its discretion, CBP may require persons who have provided the certification described in this paragraph to furnish such records or analyses as are necessary to substantiate the certification.

4. In accordance with 19 U.S.C. § 1337(l), the provisions of this Order shall not apply to coaxial cable connectors imported by and for the use of the United States, or imported for, and to be used for, the United States with the authorization or consent of the Government.

5. The Commission may modify this Order in accordance with the procedure described in section 210.76 of the Commission's Rules of Practice and Procedure (19 C.F.R. § 210.76).

6. The Commission Secretary shall serve copies of this Order upon each party of record in this investigation and upon the Department of Health and Human Services, the Department of Justice, the Federal Trade Commission, and the Bureau of Customs and Border Protection.

7. Notice of this Order shall be published in the *Federal Register*.

By order of the Commission.

James R. Holbein
Secretary to the Commission

Issued: September 13, 2011

CERTAIN COAXIAL CABLE CONNECTORS AND COMPONENTS THEREOF AND PRODUCTS CONTAINING SAME **337-TA-650**

CERTIFICATE OF SERVICE

I, James R. Holbein, hereby certify that the attached has been served by hand upon the Commission Investigative Attorney, David O. Lloyd, Esq., and the following parties as indicated on **September 13, 2011.**

James R. Holbein, Secretary
U.S. International Trade Commission
500 E Street, SW
Washington, DC 20436

On Behalf of Complainant John Mezzalingua Associates, Inc.:

Patrick D. Gill, Esq.
RODE & QUALEY
55 W. 39th Street
New York, NY 10018

( ) Via Hand Delivery
( ) Via Overnight Mail
(✓) Via First Class Mail
( ) Other: _____

On Behalf of Respondents GEM Electronics and Fu Ching Technical Industry Co., LTD.:

John R. Horvack, Jr., Esq.
CARMODY & TORRANCE, LLP
195 Church Street
New Haven, CT 06509

( ) Via Hand Delivery
( ) Via Overnight Mail
(✓) Via First Class Mail
( ) Other: _____

UNITED STATES INTERNATIONAL TRADE COMMISSION
Washington, D.C. 20436

In the Matter of **CERTAIN COAXIAL CABLE CONNECTORS AND COMPONENTS THEREOF AND PRODUCTS CONTAINING SAME**	**Investigation No. 337-TA-650**

NOTICE OF COMMISSION DETERMINATION NOT TO REVIEW A REMAND INITIAL DETERMINATION FINDING NO VIOLATION OF SECTION 337

AGENCY: U.S. International Trade Commission.

ACTION: Notice.

SUMMARY: Notice is hereby given that the U.S. International Trade Commission has determined not to review the remand initial determination ("RID") issued by the presiding administrative law judge ("ALJ") on May 27, 2010, finding no violation of section 337. The investigation is terminated.

FOR FURTHER INFORMATION CONTACT: Daniel E. Valencia, Office of the General Counsel, U.S. International Trade Commission, 500 E Street, S.W., Washington, D.C. 20436, telephone (202) 205-1999. Copies of non-confidential documents filed in connection with this investigation are or will be available for inspection during official business hours (8:45 a.m. to 5:15 p.m.) in the Office of the Secretary, U.S. International Trade Commission, 500 E Street, S.W., Washington, D.C. 20436, telephone (202) 205-2000. General information concerning the Commission may also be obtained by accessing its Internet server at *http://www.usitc.gov*. The public record for this investigation may be viewed on the Commission's electronic docket (EDIS) at *http://edis.usitc.gov*. Hearing-impaired persons are advised that information on this matter can be obtained by contacting the Commission's TDD terminal on (202) 205-1810.

SUPPLEMENTARY INFORMATION: The Commission instituted this investigation on May 30, 2008, based on a complaint filed by John Mezzalingua Associates, Inc. d/b/a PPC, Inc. of East Syracuse, New York ("PPC"). 73 *Fed. Reg.* 31145 (May 30, 2008). The complaint alleged violations of section 337 of the Tariff Act of 1930 (19 U.S.C. § 1337) in the importation into the United States, the sale for importation, and the sale within the United States after importation of certain coaxial cable connectors and components thereof and products containing the same by reason of infringement of U.S. Patent Nos. 5,470,257 ("the '257 patent"); D440,539 ("the '539 patent"); 6,558,194 ("the '194 patent"); and D519,076 ("the '076 patent"). The complaint named eight respondents.

On October 13, 2009, the ALJ issued his final ID finding that a violation of section 337 occurred

in the importation into the United States, the sale for importation, and the sale within the United States after importation of certain coaxial cable connectors and components thereof and products containing the same by reason of infringement of the '257, '539, '076, and '194 patents.

On March 31, 2010, the Commission issued an opinion and a remand order vacating the ALJ's determination with respect to the '539 patent and remanding this part of the investigation to the ALJ for further proceedings relating to the question of whether a domestic industry exists. The Commission affirmed the ALJ's finding that a violation of section 337 occurred with respect to the '076 and '194 patents, but reversed the ALJ's finding that a violation of section 337 occurred with respect to the '257 patent.

On May 27, 2010, the ALJ issued the subject RID, finding no violation of section 337 with respect to the '539 patent. In particular, the ALJ found that PPC has not satisfied the domestic industry requirement of section 337. On June 7, 2010, PPC and the Commission investigative attorney ("IA") filed petitions for review of the RID. On June 14, 2010, PPC and the IA filed responses to the petitions.

Having examined the record of this investigation, including the ALJ's RID, the petitions for review, and the responses thereto, the Commission has determined not to review the subject RID. The investigation is terminated.

The authority for the Commission's determination is contained in section 337 of the Tariff Act of 1930, as amended (19 U.S.C. § 1337), and in sections 210.42-46 and 210.50 of the Commission's Rules of Practice and Procedure (19 C.F.R. §§ 210.42-46 and 210.50).

By order of the Commission.

Marilyn R. Abbott
Secretary to the Commission

Issued: July 12, 2010

CERTAIN COAXIAL CABLE CONNECTORS AND COMPONENTS THEREOF AND PRODUCTS CONTAINING SAME **337-TA-650**

CERTIFICATE OF SERVICE

I, Marilyn R. Abbott, hereby certify that the attached **NOTICE OF COMMISSION DETERMINATION NOT TO REVIEW A REMAND INITIAL DETERMINATION FINDING NO VIOLATION OF SECTION 337** has been served by hand upon the Commission Investigative Attorney, Kevin Baer, Esq., and the following parties as indicated on July 13, 2010.

Marilyn R. Abbott, Secretary
U.S. International Trade Commission
500 E Street, SW
Washington, DC 20436

On Behalf of Complainant John Mezzalingua Associates, Inc.:

Patrick D. Gill, Esq.
RODE & QUALEY
55 W. 39th Street
New York, NY 10018

( ) Via Hand Delivery
( ) Via Overnight Mail
(X) Via First Class Mail
( ) Other: _____

On Behalf of Respondents GEM Electronics and Fu Ching Technical Industry Co., LTD.:

John R. Horvack, Jr., Esq.
CARMODY & TORRANCE, LLP
195 Church Street
New Haven, CT 06509

( ) Via Hand Delivery
( ) Via Overnight Mail
(X) Via First Class Mail
( ) Other: _____

PUBLIC VERSION

UNITED STATES INTERNATIONAL TRADE COMMISSION
Washington, D.C.

In the Matter of

CERTAIN COAXIAL CABLE CONNECTORS AND COMPONENTS THEREOF AND PRODUCTS CONTAINING SAME

Inv. No. 337-TA-650

REMAND INITIAL DETERMINATION ON VIOLATION OF SECTION 337

Administrative Law Judge E. James Gildea

(May 27, 2010)

Appearances:
For the Complainant John Mezzalingua Associates, Inc., d/b/a PPC, Inc.

James R. Muldoon, Esq.; and Denis J. Sullivan, Esq. of Majarma Muldoon Blasiak & Sullivan LLP of Syracuse, N.Y.

Patrick D. Gill, Esq.; and R. Brian Burke, Esq. of Rode & Qualey, New York, N.Y.

For the Commission Investigative Staff:
Lynn I. Levine, Esq., Director; Kevin Baer, Esq., Investigative Attorney, of the Office of Unfair Import Investigations, U.S. International Trade Commission, of Washington, D.C.

PUBLIC VERSION

Pursuant to the Notice of Investigation, 73 Fed. Reg. 31145 (May 30, 2008), the Commission's Opinion remanding the Investigation, dated March 31, 2010 (the "Commission Opinion"), the Commission's Remand Order remanding the Investigation, dated March 31, 2010 (the "Remand Order"), and 19 C.F.R. § 210.42(a), this is the Remand Initial Determination of the Investigation in the Matter of Certain Coaxial Cable Connectors and Components Thereof and Products Containing Same, United States International Trade Commission Investigation No. 337-TA-650.

It is found that no domestic industry exists that practices United States Patent No. D440,539.

Therefore, with respect to defaulting Respondents Hanjiang Fei Yu Electronics Equipment Factory, Zhongguang Electronics, Yangzhou Zhongguang Electronics Co., Ltd., and Yangzhou Zhongguang Foreign Trade Co., Ltd., it is held that no violation of Section 337 of the Tariff Act of 1930, as amended (19 U.S.C. § 1337), has occurred in the importation into the United States, the sale for importation, or the sale within the United States after importation, of certain coaxial cable connectors by reason of infringement of the sole claim of United States Patent No. D440,539.

TABLE OF CONTENTS

REMAND INITIAL DETERMINATION ON VIOLATION OF SECTION 337 ii
I. BACKGROUND. 1
A. The Original Proceeding and Remand. 1
B. Overview of the Technology. 4
C. U.S. Patent No. D440,539. 4
II. DOMESTIC INDUSTRY 5
A. Economic Analysis 7
Litigation Expenses. 11
Settlement and License Agreements. 13
Actual Expenses. 18
III. CONCLUSIONS OF LAW 25
IV. REMAND INITIAL DETERMINATION 26

The following abbreviations may be used in this Initial Determination:

ID	Initial Determination on Violation of Section 337, dated October 13, 2009
JX	Joint Exhibit
CX	Complainant's exhibit
CDX	Complainant's demonstrative exhibit
CPX	Complainant's physical exhibit
CXR	Complainant's remand exhibit
CFF	Complainant's proposed findings of fact on remand
CCL	Complainant's proposed conclusions of law on remand
CIBr.	Complainants' initial post-hearing brief on remand
COSFF	Complainant's objections to Staff's proposed findings of fact on remand
CRBr.	Complainant's reply post-hearing brief on remand
SFF	Staff's proposed findings of fact on remand
SCL	Staff's proposed conclusions of law on remand
SIBr.	Staff's initial post-hearing brief on remand
SOCFF	Staff's objections to Complainant's proposed findings of fact on remand
SRBr.	Staff's reply post-hearing brief on remand
RTr.	Remand hearing transcript

I. BACKGROUND.

A. The Original Proceeding and Remand.

By publication of a Notice of Investigation in the *Federal Register* on May 30, 2008, pursuant to subsection (b) of Section 337 of the Tariff Act of 1930, as amended, the Commission instituted Investigation No. 337-TA-650 with respect to U.S. Patent No. 6,558,194 (the "'194 patent"), U.S. Patent No. 5,470,257 (the "'257 patent"), U.S. Patent No. D440,539 (the "'539 patent") and U.S. Patent No. D519,076 (the "'076 patent") to determine the following:

> whether there is a violation of subsection (a)(1)(B) of section 337 in the importation into the United States, the sale for importation, or the sale within the United States after importation of certain coaxial cable connectors or components thereof or products containing same that infringe one or more of claims 1 and 2 of U.S. Patent No. 6,558,194; claims 1–5 and 10 of U.S. Patent No. 5,470,257; the claim of U.S. Patent No. D440,539; and the claim of U.S. Patent No. D519,076; and whether an industry in the United States exists as required by subsection (a)(2) of section 337[.]

73 Fed. Reg. 31145 (2008).

John Mezzalingua Associates, Inc., d/b/a PPC, Inc. ("PPC") of East Syracuse, New York, is named in the Notice of Investigation as the Complainant. *Id.* The Respondents named in the Notice of Investigation were: Aska Communication Corp., Edali Industrial Corp., Fu Ching Technical Industrial Co., Ltd., Gem Electronics, Hanjiang Fei Yu Electronics Equipment Factory, Zhongguang Electronics, Yangzhou Zhongguang Electronics Co., Ltd., and Yangzhou Zhongguang Foreign Trade Co., Ltd. *Id.* The Commission Investigative Staff of the Commission's Office of Unfair Import Investigations is also a party in this Investigation. *Id.*

The evidentiary hearing on the question of violation of Section 337 began on July 6, 2009, and ended on July 14, 2009. Respondent Gem Electronics ("Gem") and Respondent Fu Ching Technical Industrial Co., Ltd. ("Fu Ching") (collectively, "Respondents"); Complainant John

Mezzalingua Associates, Inc., d/b/a PPC, Inc. ("PPC"); and Commission Investigative Staff ("Staff"), were represented by counsel at the hearing. (Hearing Tr. at 94-96.) The Administrative Law Judge issued the Final Initial Determination ("ID") on October 13, 2009, finding, with respect to U.S. Patent No. D440,539 (the "'539 patent") that a violation had occurred by defaulting respondents Hanjiang Fei Yu Electronics Equipment Factory, Zhongguang Electronics, Yangzhou Zhongguang Electronics Co., Ltd., and Yangzhou Zhongguang Foreign Trade Co., Ltd. (collectively, "Defaulting Respondents").

The Commission determined to review certain portions of the ID, and requested briefing from the parties and general public on such issues as domestic industry. (Notice of Commission Determination to Review-in-Part a Final Determination Finding a Violation of Section 337, dated December 14, 2009, at 2-4.) On March 31, 2010, the Commission issued a notice, opinion, and order (i) vacating the Administrative Law Judge's finding in the ID that PPC had established a domestic industry for the '539 patent and (ii) remanding that portion of the Investigation relating to the '539 patent for additional findings consistent with the Commission Opinion. (Notice of Commission Issuance of a General Exclusion Order, a Limited Exclusion Order, and a Remand Order, dated March 31, 2010, at 2 ("Commission Notice"); Commission Opinion at 54-56; Remand Order at 2-3.)

Specifically, the Commission found:

> On remand, PPC must show that each asserted litigation activity is related to licensing. In addition, PPC must show that these activities are related to the '539 design patent. For example, although the { } litigation was clearly connected to the '539 design patent, the license makes no mention of the patent. And finally, PPC must document the costs incurred for each activity. PPC cannot rely on its broad allegation that it spent { } on its litigation with { } and that this is a substantial investment in the patent's exploitation through licensing. Litigation activities may need to be broken down into their constituent parts. The ALJ may presume that license drafting and execution are associated with licensing, but PPC must still prove that the license is related to the patent at

issue and what the related costs were. As described above, the ALJ may also consider the presence and number of licenses and the presence of documents or activities soliciting licenses as well as any other relevant evidence to determine whether there has been "substantial" investment in exploitation through licensing.

Before the ALJ, PPC relied on its litigation with Corning Gilbert Inc. ("Coming Gilbert") and the ALJ relied on it in his decision as well. ID at 122. PPC sued Corning Gilbert for patent infringement of the '539 design patent on August 21, 2001, only months after filing suit against { }, in the United States District Court for the District of Arizona. *See* Malak Tr. at 190:24-191:9. This case was dismissed on February 25, 2004 based on a settlement agreement. *Id.* PPC has not shown that a license issued, nor has PPC asserted that this litigation was in pursuit of a license. Because we concluded above that patent infringement litigation activities alone cannot form the basis of a domestic industry, we do not consider PPC's Coming Gilbert litigation in determining whether there has been a substantial investment in the exploitation of the '539 design patent. In addition, PPC does not appear to renew its arguments relating to the Coming Gilbert litigation before the Commission. Accordingly, we do not believe remand is necessary to determine if this litigation is related to licensing.

Finally, PPC asks the Commission to consider several cease-and-desist letters. Cease-and-desist letters are not inherently related to licensing, as they may simply instruct the recipient to cease the infringing activity. On the other hand, they may be related to licensing if, for example, they offer the recipient the option of taking a license or they form part of a concerted licensing program or effort. If PPC wishes to rely on these letters, it must show on remand that the cease-and-desist letters are related to licensing, and are related to the '539 design patent. PPC must also establish the costs of drafting and sending those letters.

(Commission Op. at 54-56.)

As a result, the Commission ordered:

1. The question of whether PPC has made a substantial investment in exploitation of the '539 patent is remanded to the Administrative Law Judge for a remand initial determination ("RID") consistent with the principles set forth in the Commission's Opinion.

2. The Administrative Law Judge shall make findings consistent with the Commission opinion and shall consider, among other things, (1) what is the cost of each individual activity alleged by PPC to be related to licensing, (2) whether each individual activity and its cost is associated with licensing, and (3) whether each individual activity and its cost is associated with the '539 patent.

* * *

> 6. The Administrative Law Judge may otherwise conduct the remand proceedings as he deems appropriate, including reopening the record.

(Remand Order at 2-3.) In response to the Remand Order, the Administrative Law Judge determined that a four-hour remand hearing and additional briefing would be appropriate. (Order No. 29 at 2.) On April 27, 2010, the remand hearing was held on the question of whether PPC made a substantial investment in the exploitation of the '539 design patent. (RTr. at 6.) The parties were asked to develop the record with respect to the cost and extent of each individual activity alleged by PPC to be related to licensing of the '539 patent, including witness testimony or other evidence with respect to litigation activities and costs, and particularly any relevant costs associated with conducting settlement negotiations and drafting and negotiating a license, that may be related to licensing of the '539 design patent. (*Id.*) Complainant John Mezzalingua Associates, Inc., d/b/a PPC, Inc. ("PPC") and Commission Investigative Staff ("Staff"), were represented by counsel at the remand hearing. (*Id.* at 2-3.)

B. Overview of the Technology.

The products at issue are "drop" coaxial cable connectors used in the telecommunications, satellite and cable television industries. (Comm'n Op. at 6.) Drop connectors are "small, generally cylindrical devices that are used to mechanically and electrically connect a coaxial cable to an electronic device." (*Id.*)

C. U.S. Patent No. D440,539.

U.S. Patent No. D440,539 (the "'539 patent") is entitled "Closed Compression-Type Coaxial Cable Connector," which resulted from a continuation application claiming priority to U.S. Patent Application No. 08/910,509 (the "'509 application"), filed on August 2, 1997. (*See* CX-3 at PPC-TRIAL-000075.) The '539 patent was filed on April 28, 2000, and issued on April

17, 2001. (*Id.*) The '539 patent names Noah P. Montena as the inventor. (*Id.*) The '539 patent was assigned to, and is currently owned by, PPC. (Comm'n Op. at 7.)

There is only one claim in the '539 patent, which reads as follows: "[t]he ornamental design for a closed compression-type coaxial cable connector, as shown and described." (CX-3 at PPC-TRIAL-000075.) The '539 patent discloses four Figures, along with their descriptions. Figure 1 is "a perspective view of a closed compression-type coaxial cable connector according to the present invention." (*Id* at 77.)

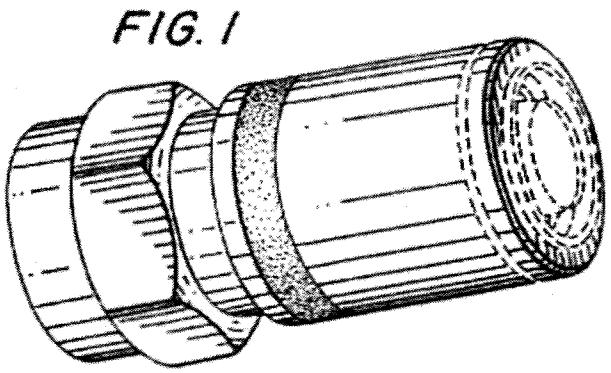

(*Id.*) The Administrative Law Judge previously found that Defaulting Respondents' Fei Yu Model 043 connector infringes the '539 patent. (ID at 83-85 (unreviewed in relevant part); Notice of Commission Determination to Review-in-Part a Final Determination Finding a Violation of Section 337, dated December 14, 2009, at 2; Comm'n Op. at 2.)

II. DOMESTIC INDUSTRY

A determination must be made as to whether an industry in the United States exists as required by subsection (a)(2) of Section 337 with respect to the '539 patent. Section 337 declares unlawful the importation, the sale for importation or the sale in the United States after importation of articles that infringe a valid and enforceable U.S. patent "only if an industry in the United States, relating to articles protected by the patent . . . concerned, exists or is in the process

of being established." 19 U.S.C. § 1337(a)(2); *Certain Ammonium Octamolybdate Isomers*, Inv. No. 337-TA-477, Comm'n Op. at 55 (U.S.I.T.C., Jan. 2004) ("*Certain Isomers*"). The domestic industry requirement consists of both an economic prong (*i.e.*, the activities of, or investment in, a domestic industry) and a technical prong (*i.e.*, whether complainant practices its own patents). *Certain Isomers*, at 55. The complainant bears the burden of proving the existence of a domestic industry. *Certain Methods of Making Carbonated Candy Products,* Inv. No. 337-TA-292, Comm'n Op. at 34-35, Pub. No. 2390 (U.S.I.T.C., June 1991).

Even though all of the respondents accused of infringing the '539 patent were found in default, PPC did not choose to apply to the Commission for immediate relief against Defaulting Respondents in the form of a limited exclusion order pursuant to Section 337(g)(1). Instead PPC requested that the Administrative Law Judge recommend a general exclusion order. For a limited exclusion order, "the Commission shall presume the facts alleged in the complaint to be true[,]" but this presumption does not apply when general exclusion orders are sought, because such orders "are directed to goods from all sources, including future and unknown current importers." *Certain Plastic Molding Machines With Control Systems Having Programmable Operator Interfaces Incorporating General Purpose Computers, and Components Thereof*, Inv. No. 337-TA-462, Comm'n Op. at 6 (U.S.I.T.C., April 2, 2003). For the Commission to issue a general exclusion order in an investigation, regardless of whether there are appearing or defaulting respondents, a complainant must establish a Section 337 violation "by substantial, reliable, and probative evidence . . . ." 19 U.S.C. § 1337(g)(2)(B); 5 U.S.C. § 556; ID at 119-120. Thus, for the remedy it seeks, PPC must show "by substantial, reliable, and probative evidence" that it meets the domestic industry requirement with respect to the '539 patent.

A. Economic Analysis

The economic prong of the domestic industry requirement is defined in subsection 337(a)(3) as follows:

> (3) For purposes of paragraph (2), an industry in the United States shall be considered to exist if there is in the United States, with respect to the articles protected by the patent, copyright, trademark or mask work concerned –
>
> (A) Significant investment in plant and equipment;
> (B) Significant employment of labor or capital; or
> (C) Substantial investment in its exploitation, including engineering, research and development, or licensing.

19 U.S.C. § 1337(a)(3). The economic prong of the domestic industry requirement is satisfied by meeting the criteria of any one of the three factors listed. Establishment of an economic domestic industry is not dependent on any "minimum monetary expenditure"; nor is there a "need to define or quantify the industry itself in absolute mathematical terms." *Certain Stringed Musical Instruments and Components Thereof*, Inv. No. 337-TA-586, Comm'n Op. at 25-26 (U.S.I.T.C., May 2008) ("*Stringed Instruments*"). Rather, complainant must demonstrate a sufficiently focused and concentrated effort to lend support to a finding of a 'substantial investment.' *Id.*

During the initial phase of the Investigation, PPC relied heavily on its litigation activities to establish an economic domestic industry for the '539 patent, and was deemed to have abandoned[1] the argument that the PPC EX connector practices the '539 patent. (ID at 108 n.36; *id.* at 113.) The Commission has determined to vacate in part the finding in the ID that PPC had established a domestic industry for the '539 patent based on these litigation activities and to

[1] The Administrative Law Judge further found that even if PPC had not abandoned its argument that the EX connector practiced the '539 patent, the EX connector did not meet the ordinary observer test--a finding that no party objected to and that was affirmed by the Commission. (ID at 108 n.36; Commission Opinion at 41, 53.) PPC sought to admit evidence at the remand hearing that it had designed and manufactured a version of the EX product that did practice the '539 patent design (Tr. at 131:8-132:15), however, this evidence was rejected as beyond the scope of the remand and should have been presented during the initial evidentiary hearing. (Tr. at 134:16-25.)

remand this issue for further proceedings. (Remand Order at 2.) The Commission further clarified that litigation costs taken alone do not constitute investment in exploitation. (Comm'n Op. at 50.) Litigation costs related to licensing, however, may constitute investment in exploitation. (*Id.*) In order to establish that a substantial investment in exploitation of the patent has occurred through licensing, a complainant must prove that each asserted activity is related to licensing and also show that these licensing activities pertain to the particular patent at issue. (*Id.*) According to the Commission—

> Depending on the circumstances, such activities may include, among other things, drafting and sending cease and desist letters, filing and conducting a patent infringement litigation, conducting settlement negotiations, and negotiating, drafting, and executing a license. The mere fact, however, that a license is executed does not mean that a complainant can necessarily capture all prior expenditures to establish a substantial investment in the exploitation of the patent. A complainant must clearly link each activity to licensing efforts concerning the asserted patent.

(*Id.* at 50-51.)

On remand PPC must show that the litigation activities it previously had argued would satisfy the economic prong of the domestic industry requirement are related to the licensing of the '539 design patent. (Commission Op. at 54-56.) Furthermore, PPC must document the costs for these activities. (*Id.*) Some of the considerations for a determination of whether a domestic industry exists for the '539 patent based on PPC's licensing activity include the presence and number of licenses and the presence of documents or activities soliciting licenses. (*Id.*) As explained below, it is found that the economic domestic industry requirement has not been satisfied with respect to the '539 patent.

PPC argues that it was involved in six separate lawsuits related to its efforts to license the '539 patent: (i) litigation asserting infringement of the '539 patent against {

}; (ii) litigation in

{ } involving PPC connectors that PPC asserts practice the '539 patent and which were accused of infringing patents owned by { } and licensed by { } (the "First { } action"); (iii) litigation in { } asserting that connectors made by { }, infringe the '539 patent (the "Second { } action"); (iv) a declaratory judgment action in { } brought by { } that their connectors do not infringe PPC's '194 patent (the "Third { } action"); (v) a declaratory judgment action in { } brought by { } that their connectors do not infringe PPC's '194 patent (the "Fourth { } action"); and (vi) litigation asserting infringement of the '194 patent against { } in { }. (CIBr. at 7-10.) According to PPC, it initially brought the { } action against { } to enforce its '539 patent rights and/or get { } to take a license,[2] and when it became embroiled in further litigation with { } in the First and Second { } actions, decided to involve the '194 patent. (*Id.* at 7-8, 11-14.) PPC claims that it was only after it had succeeded in obtaining a jury verdict in the { } action that the parties agreed to negotiate a license and settlement with respect to all six actions and multiple patents, including the '539 patent. (*Id.* at 14.) Thus, says PPC, there is a nexus between all six actions and PPC's licensing efforts with respect to the '539 patent. Based on this rationale, PPC argues, *inter alia*, that all of the litigation expenses relating to the '539 patent in the { } action and Second { } action, and all of the licensing and settlement expenses relating to all six actions should be considered in determining whether PPC has established an economic domestic industry with respect to the '539 patent. (*Id.* at 14, 17-19.)

[2] According to PPC, it succeeded in obtaining a judgment for monetary damages and an injunction against { }, obtained an affirmance on appeal, brought an unsuccessful motion for contempt with respect to { } attempt to design around the patent, and was in the middle of a second appeal with respect to damages when the litigation was settled. (CIBr. at 7-8.)

Staff argues that PPC has not shown that it has expended "substantial resources towards a licensing industry involving the asserted '539 patent." (SIBR at 2.) Staff argues that PPC improperly equates settlement activity with licensing activity, and that for policy reasons, settlement activity should not be considered. (*Id.* at 2, 6, 11 n.7.) Rearguing the issues before the Commission on review, Staff suggests that the filing of a patent litigation is a "mere ownership" activity. (*Id.* at 7.) Staff objects to all of PPC's theories relating to its investment in licensing and does not appear to concede even a single expenditure toward licensing activities relating to the '539 patent. (*Id.* at 8-10.) Staff further argues that the PPC-{ } license is not directed to the '539 patent, and that the Settlement Agreement between PPC, { } specifically states that the Agreement does not provide a license to the '539 patent. (*Id.* at 10-11.) Finally, Staff argues that PPC obtained a judgment in the { } action and any monies it received by way of the agreements with { } counted as settlement, not licensing. (*Id.* at 11-12.)

PPC responds that Staff ignored the standards provided by the Commission in the Commission Opinion and that the Commission expressly included settlement activities such as settlement negotiations within the scope of litigation activities that may serve to support economic domestic industry with respect to licensing efforts. (CRBr. at 3-8.) PPC further argues that its litigation to enforce the '539 patent was its only option at the time, because "design patents were new to the coaxial cable industry (CPFF II.5) and there was a general reluctance in that industry to take any licenses, to say nothing of a patent license." (*Id.* at 10-11.) PPC further notes that it sought a license during the { } action, but that { } chose to design around the patent rather than pay for a license. (*Id.* at 11.)

With respect to the License and Settlement Agreements, PPC responds that Staff took various paragraphs out of context and ignored the testimony of Mr. Malak, who was personally involved in drafting these two agreements. (*Id.* at 12-15.) In particular, PPC argues that the License Agreement includes all patents issuing from parent application 08/910,509 (the "'509 application") which by definition includes the '539 design patent. (*Id.* at 13.) In addition, PPC argues that the portion of the Settlement Agreement that states that that the Agreement does not provide a license to the '539 patent is directed solely to { }. (*Id.* at 14.) Instead, { } were required to purchase licensed connectors directly from { }, hence the express marking provision of Paragraph 32 requiring { } connectors to be marked that they are licensed under the '539 patent. (*Id.* at 14-15.)

Litigation Expenses.

According to Mr. Stephan Malak, PPC's former Vice President and General Counsel, who undisputedly had experience in patent licensing at the time (CFF II.2 (undisputed)), there were no design patents in the coaxial cable industry in 1998[3] and there was a "general feeling in the connector industry" of reluctance to take any licenses. (Tr. at 21:12-15, 43:16-20.) It was PPC's general practice to send cease and desist letters and offer a license to potential infringers before bringing suit. (CIBR at 6; CX-90C.) However, PPC has presented no evidence to show that it sent actually any cease and desist letters to { } relating to the '539 design patent or otherwise engaged in any license offers *prior* to bringing the { } action. Taking these considerations into account, the Administrative Law Judge finds that it would not be appropriate to apportion 100 percent of PPC's litigation expenses in the { } action to PPC's licensing

[3] Staff objects to this evidence as irrelevant. Staff is incorrect. "The domestic industry determination should not be made according to any rigid formula, but by an examination of the facts in each investigation, the articles of commerce, and the realities of the marketplace." *Certain Liquid Crystal Display Modules, Products Containing Same, and Methods for Using Same*, Inv. No. 337-TA-634, Order No. 8 at 3 (U.S.I.T.C., November 2008) (unreviewed) (emphasis added).

efforts. However, the Administrative Law Judge finds that specific expenses, if any, relating directly to licensing and settlement, whether required by the court or voluntary, that occurred during the { } action (including the contempt motion and two appeals), either internally (Tr. at 43:21-25) or with { } (Tr. at 44:15-17, 45:20-46:3, 72:4-16), should be considered and these will be addressed with more specificity below.

With respect to the Second { } action against { }, which also concerned infringement of the '539 patent (CFF III.B.3-5 (undisputed)), Mr. Malek testified that it was PPC's strategy to "put pressure on { }." (Tr. at 44:18-25. *See also id.* at 48:13-49:5; 71:13-72:3.) The Administrative Law Judge further notes that PPC presented no evidence to show that it sent cease and desist letters to { } relating to the '539 design patent before instituting the Second { } action. PPC's sole evidence that PPC engaged in advance effort to negotiate with { } is Mr. Malek's testimony that "[i]t was our desire to reach some sort of resolution with them and they wouldn't talk." (Tr. at 71:22-25.) It is unclear, however, from this statement that PPC only sought a cessation of litigation or whether PPC made any license offers prior to bringing suit. Therefore, the Administrative Law Judge finds that it would not be appropriate to apportion 100 percent of PPC's litigation expenses in the Second { } action to PPC's licensing efforts. However, the Administrative Law Judge finds that specific expenses relating directly to licensing and settlement that occurred during the Second { } action, if any, should be considered. These will be addressed with more specificity below.

With respect to the First, Third and Fourth { } actions and the { } action, which undisputedly did not concern the '539 patent (CFF III.B.2 (undisputed); CFF III.B.6 (undisputed); CFF III.B.7 (undisputed); CFF III.C.6 (undisputed)), the Administrative Law

Judge finds that it would be inappropriate to apportion 100 percent of PPC's litigation expenses from any of these four actions. Mr. Malek testified at length, however, that after the December 2003 jury verdict in the { } action, PPC, { } engaged in negotiations relating to settlement and licensing in an effort to resolve all six of the still pending actions. (Tr. at 25:19-26:16, 50:5-52:2; CXR-34C; CXR-35C.) Mr. Malek firmly stated, based on his role in the settlement negotiations and formation of the Settlement and License Agreements, that a license including the '539 patent was intended. (Tr. at 80:12-25.) Therefore, the Administrative Law Judge finds that any expenses attributed to settlement or licensing negotiations for any of the six actions that occurred after December 2003 should be considered because these expenses were inextricably intertwined[4] with PPC's efforts to license the '539 patent. Whether expenses attributed to drafting and reviewing the Settlement and Licensing Agreements should also be considered depends on whether these Agreements actually provide for a license of the '539 patent. The Administrative Law Judge concludes that they do, as will be discussed in more detail below.

Settlement and License Agreements.

It is undisputed that the settlement negotiations between PPC, { } with respect to the { } action, four { } actions, and { } action resulted in a

[4] The Administrative Law Judge rejects Staff's arguments that settlement negotiations should not be considered as a matter of policy. First, evidence relating to these negotiations is not being produced to determine { } liability, nor is it being introduced to establish liability against Defaulting Respondents. The purpose of establishing economic domestic industry is to ensure that the Commission has jurisdiction over PPC's efforts to enforce its design patent against Defaulting Respondents. Likewise, the Administrative Law Judge does not believe that introduction of settlement-related evidence for this limited purpose will in some way deter future efforts at settlement—particularly since no party to the Settlement Agreement has objected. Furthermore, the Administrative Law Judge finds that Staff is seeking to unduly narrow the Commission's opinion, which specifically notes that settlement activities may be considered. Commission Opinion at 50-51. Here, the testimony, invoices for attorney time, and the final agreements themselves all serve to demonstrate that the settlement discussions were combined with licensing discussions.

Settlement Agreement in February of 2004. (CFF III.B.8 (undisputed); CFF IV.1-2 (undisputed); CFF IV.6-7 (undisputed); CXR-34C.) It is further undisputed that:

{

}

{

}

(CFF IV.8-13 (undisputed); CFF IV.16-17 (undisputed); CFF IV.19 (undisputed); CFF IV.22-23 (undisputed); CFF IV.25 (undisputed).) PPC and Staff contest the meaning of several of the provisions of the Settlement Agreement and its Exhibit F (the License Agreement). The relevant language of these disputed Agreements follows:

{

}

{

}

{

}

(CXR-34C at 5-8 (emphasis added); CXR-35C at 1, 3-4, (emphasis added).)

Staff argues that the Settlement Agreement expressly bars a license to the '539 patent. (SIBr. at 10-11.) PPC counters that this is true only with respect to { }. (CRBr. at 14.) When Terms 23 and 24 are read together, it is apparent that Term 23 applies to the settlement with respect to { }, and expressly notes that the payment by { } shall be "in full and complete satisfaction for all judgments, damages, claims, counter-claims, attorneys' fees, costs and expenses" for various cases, including the { } and Second { } actions. (CXR-34C at 7.) Term 24 applies to { } and notably <u>does not</u> include the { }

action—a case that only { } was involved in. (*Id.* at 7-8.) Specifically, Term 24 notes that the payment by { } "shall be in full and complete satisfaction for all judgments, damages, claims, counter-claims, attorneys' fees, costs and expenses" for various cases *excluding the* { } *action.* (*Id.* at 8.) In the very same sentence that relates to the payments by { }, the provision bars any license to the '539 patent. (*Id.*) Thus the Administrative Law Judge finds that Staff is incorrect that Term 24 should be read to mean that { } does not have a license in the '539 patent, when it is clear that that portion of Term 24 relates to { } payment in satisfaction of the { } action and the four { } actions.

The Administrative Law Judge further rejects Staff's argument that the PPC-{ } License Agreement is not directed to the '539 patent. (SIBr. at 10-11.) The Licensed Patents are defined to include continuation applications of the Parent Application. (CXR-35C at 3-4.) The Parent Application is defined as the '509 application (*id.* at 1), and the '539 patent is a continuation of the '509 application. (CX-3 at PPC-TRIAL-000075.) Various models of the { } connector were included in the definition of the Licensed Products (CXR-35C at 4), although it should be noted that the models were identified based on a finding of infringement in the { } action, not the { } action. However, the Settlement Agreement makes clear that various { } connectors found to infringe the '539 patent in the { } action, as well as a model of the { } connector, must be marked as licensed under the '539 patent. (CX-34C at 13.)

Because the Administrative Law Judge finds that the Settlement and License Agreements include the '539 patent, PPC's drafting costs for these Agreements should be considered in determining the amount of licensing activity relating to the '539 patent.

Actual Expenses.

As discussed above, the Administrative Law Judge found that only those settlement and licensing negotiations relating to the { } and Second { } actions, as well as any settlement, licensing and drafting expenses for the Settlement and License Agreements occurring in any of the six actions after the jury verdict in December of 2003, will be considered. PPC presented evidence of its expenditures toward licensing and settlement negotiations, as well as the drafting of the License and Settlement Agreements, in the form of billing statements by its counsel. (CXR-32C.) Staff argues that some of these billing entries should be rejected because PPC did not attempt to determine the specific amount of time devoted to licensing and settlement when a billing entry included multiple matters. (SIBr. at 8-10.) PPC stipulated that such a break-down of attorney time would be unduly speculative. (CFF VII.25 (undisputed).) However, "[a] precise accounting is not necessary, as most people do not document their daily affairs in contemplation of possible litigation." *Stringed Instruments* at 26. The Administrative Law Judge will take all relevant billing entries into account, giving reduced weight to those entries that are "partial." The Administrative Law Judge finds the following expenses from CXR-32C relevant[5] to the remand inquiry:

Date	Litigation	Time/Est. Cost	Descr.	Full/Partial?
Period prior to jury verdict in { } action				
2/4/03	{ } ({ } bill from McDermott)	1.25 hrs/$400[6]	Attorney named K. Stolte: Conf. re poss. settlement PPC-TRIAL-005743	Partial (1 of 4)
2/6/03	{ } ({ } bill from McDermott)	0.5 hrs/$160	Attorney named K. Stolte: Conf. re poss. settlement PPC-TRIAL-005743	Partial (1 of 3)
2/10/03	{ } ({ } bill from	0.5 hrs/$160	Attorney named K. Stolte: Conf. re settlement agt	Partial (1 of 3)

[5] Invoices relating to the Corning Gilbert litigation or billing entries which on their face related to settlement and licensing with respect to Corning Gilbert were not considered. The Commission stated with respect to the Corning Gilbert litigation that "we do not believe remand is necessary to determine if this litigation is related to licensing. Commission Opinion at 55. (*See also* Tr. at 63:22-25.)

[6] The hourly rate for K. Stolte is specified as $320. (*See* CXR-32C at PPC-TRIAL-005742.)

	McDermott)		PPC-TRIAL-005743	
2/11/03	{ } ({ } bill from McDermott)	2 hrs/$1040[7]	Attorney named K. Jurek: Conf. with client re settlement strategy PPC-TRIAL-005743	Full
2/12/03	{ } ({ } bill from McDermott)	1.25 hrs/$650	Attorney named K. Jurek: Conf. with client re settlement strategy PPC-TRIAL-005743	Full
2/12/03	{ } ({ } bill from McDermott)	1.25 hrs/$478.75[8]	Attorney named R. Faraci: Conf. with client re settlement; work on settlement exhibits PPC-TRIAL-005743	Full
2/13/03	{ } ({ } bill from McDermott)	3 hrs/$1560	Attorney named K. Jurek: Conf with client re { } request to incl. all patents in release PPC-TRIAL-005743	Partial (1 of 2)
2/14/03	{ } ({ } bill from McDermott)	2.25 hrs/$1170	Attorney named K. Jurek: Follow-up confs with client re settlement PPC-TRIAL-005743	Partial (1 of 2))
2/19/03	{ } ({ } bill from McDermott)	1.5 hrs/$780	Attorney named K. Jurek: Conf. with client re settlement strategy PPC-TRIAL-005744	Partial (1 of 2)
2/20/03	{ } ({ } bill from McDermott)	1 hr/$520	Attorney named K. Jurek: confs re settlement PPC-TRIAL-005744	Partial (1 of 2)
Period following 12/5/03 jury verdict in { } litigation				
12/10/03	{ }	7 hrs/$1575[9]	Muldoon tel. conf. with client re potl. settlement of actions PPC-TRIAL-005662	Partial (1 of 3)
12/10/03	Unclear (Morrison Cohen bill labeled financing)	0.7 hrs/$402.50[10]	Attorney with initials HAS: conf. call re lawsuit settlement structure PPC-TRIAL-005712	Full
12/11/03	Unclear (Morrison Cohen	0.9 hrs/$517.50	Attorney with initials HAS: tel. conf. re lawsuits	Full

[7] The hourly rate for K. Jurek is specified as $520. (*See* CXR-32C at PPC-TRIAL-005742.)
[8] The hourly rate for R. Faraci is specified as $490. (*See* CXR-32C at PPC-TRIAL-005728, 5735.)
[9] Mr. Muldoon's billable rate is $225 per hour. (CX-47C at PPC-TRIAL-005970.)
[10] The billable rate for HAS is $575. (CX-47C at PPC-TRIAL-005979)

	bill labeled financing)		and settlement strategy PPC-TRIAL-005712	
12/15/03	Unclear ({ } bill)	0.75 hrs /$168.75	Muldoon tel. confs. with client re settlement negots. PPC-TRIAL-005666	Partial (1 of 2)
12/18/03	Unclear ({ } bill)	2.5 hrs/$562.50	Muldoon tel. confs. with client re settlement PPC-TRIAL-005667	Partial (1 of 4)
12/20/03	Multiple ({ } bill)	3 hrs/$675	Muldoon work on Settlement Agt; tel. conf. with client re settlement terms PPC-TRIAL-005667	Partial (2 of 6)
12/21/03	Multiple ({ } bill)	1.25 hrs/$281.25	Muldoon tel confs. with client re settlement terms; review of draft License Agreement; work on draft Settlement Agreement PPC-TRIAL-005668	Full
12/29/03	Multiple ({ } bill)	3.5 hrs/$787.50	Muldoon tel. confs. with client re settlement of various lawsuits PPC-TRIAL-005667	Partial (1 of 3)
12/30/03	Unclear ({ } bill from McDermott)	1 hr/$490	Attorney named R. Faraci: Rev. file re judgment amts; confs re potential settlement PPC-TRIAL-005733	Full
12/31/03	Unclear ({ } bill from McDermott)	0.5 hrs/$245	Attorney named R. Faraci: Call to client; conf. re settlement PPC-TRIAL-005733	Full
1/09/04	Unclear (Morrison Cohen bill labeled financing)	2.3 hrs/$1322.50	Attorney with initials HAS: Review numbers on { }, sketch out structure PPC-TRIAL-005714	Partial (2 of 3)
1/13/04	Unclear (Morrison Cohen bill labeled financing)	2 hrs/$1150	Attorney with initials HAS: Review and discuss { } proposal, rev. counterproposals PPC-TRIAL-005714-5	Partial (2 of 3)
1/22/04	Unclear ({ } bill from McDermott)	4 hrs/$1960	Attorney named R. Faraci: Tel. confs. with client and others; review { } settlement and license agts. PPC-TRIAL-005727	Full

1/22/04	Unclear (Morrison Cohen bill labeled financing)	0.5 hrs[11]	Attorney with initials TAC: various re license and settlement agreement PPC-TRIAL-005715	Full
1/28/04	Unclear (Morrison Cohen bill labeled financing)	0.7 hrs/$402.50	Attorney with initials HAS: Review { } drafts PPC-TRIAL-005715	Full
1/29/04	Unclear (Morrison Cohen bill labeled financing)	1.3 hrs/$747.50	Attorney with initials HAS: Review license PPC-TRIAL-005715	Full
1/30/04	Unclear (Morrison Cohen bill labeled financing)	1.3 hrs/$747.50	Attorney with initials HAS: Review licens PPC-TRIAL-005715e	Full
1/30/04	{ }	2 hrs/$450	Muldoon tel. conf with counsel re settlement discussions PPC-TRIAL-005670	Partial (1 of 4)
1/31/04	Unclear (Morrison Cohen bill labeled financing)	0.7 hrs/$402.50	Attorney with initials HAS: Review Settlement Agt. PPC-TRIAL-005715	Full
2/2/04	Unclear (Morrison Cohen bill labeled financing)	1.7 hrs/$977.50	Attorney with initials HAS: complete settlement agt.; review and e-mail; conference calls PPC-TRIAL-005717	Full
2/2/04	Multiple ({ } bill)	5.5 hrs/$1,237.50	Muldoon, various relating to settlement and Settlement and License Agreements PPC-TRIAL-005676	Full
2/3/04	Multiple ({ } bill)	2.5 hrs/$562.50	Muldoon, various relating to settlement and Settlement and License Agreements PPC-TRIAL-005676	Full
2/3/04	Unclear (Morrison Cohen bill labeled financing)	3 hrs/$1725	Attorney with initials HAS: e-mail re escrow; rev. drafts of license and settlement agts. PPC-TRIAL-005717	Full

[11] The billable rate for TAC is not known. (CX-47C at PPC-TRIAL-005979.) The hours spent will be credited, but no dollar value assigned.

2/4/04	Multiple ({ } bill)	5.75 hrs/$1,293.75	Muldoon, various relating to settlement and Settlement and License Agreements PPC-TRIAL-005676	Full
2/5/04	Multiple ({ } bill)	7.00 hrs/$1,575	Muldoon, various relating to settlement and Settlement and License Agreements PPC-TRIAL-005677	Full
2/5/04	Unclear (Morrison Cohen bill labeled financing)	5.5 hrs/$3162.50	Attorney with initials HAS: conf. calls, rev. agt. drafts and comment PPC-TRIAL-005717	Full
2/6/04	Multiple ({ } bill)	8.00 hrs/$1,800	Muldoon, various relating to settlement and Settlement and License Agreements PPC-TRIAL-005677	Full
2/7/04	Unclear (Morrison Cohen bill labeled financing)	4.3 hrs/$2472.50	Attorney with initials HAS: conf calls and review of drafts PPC-TRIAL-005717	Full
2/7/04	Multiple ({ } bill)	5.5 hrs/$1,237.5	Muldoon, various relating to settlement and Settlement and License Agreements PPC-TRIAL-005677	Full
2/08/04	{ }	1.75 hrs/$393.75	Muldoon revision of draft Settlement Agt; correspondence to client and counsel re same PPC-TRIAL-005673	Full
2/8/04	Multiple ({ } bill)	5.00 hrs/$1,125	Muldoon, various relating to settlement and Settlement and License Agreements PPC-TRIAL-005678	Full
2/09/04	{ }	3.5 hrs/$787.50	Muldoon tel. conf. with counsel re review of Agt. PPC-TRIAL-005673	Partial (1 of 8)
2/9/04	Multiple ({ } bill)	2.75 hrs/$618.75	Muldoon, various relating to settlement and Settlement and License Agreements PPC-TRIAL-005678	Partial (6 of 8) (time exclusively related to press releases not incl.)

2/9/04	Unclear (Morrison Cohen bill labeled financing)	0.3 hrs/$172.50	Attorney with initials HAS: e-mails re drafts PPC-TRIAL-005717	Full
2/10/04	Unclear (Morrison Cohen bill labeled financing)	1.6 hrs/$920	Attorney with initials HAS: tel. conf. re drafts PPC-TRIAL-005717	Partial (1 of 3)
2/10/04	{ }	3.25 hrs/$731.25	Muldoon tel. conf. with counsel re settlement of { } action PPC-TRIAL-005673	Partial (1 of 8)
2/10/04	Multiple ({ }bill)	2.25 hrs/$506.25	Muldoon, various relating to settlement, dismissal, and final Settlement and License Agreements PPC-TRIAL-005678	Full
2/11/04	Multiple ({ } bill)	2.5 hrs/$562.50	Muldoon, various relating to settlement, dismissal, and final Settlement and License Agreements PPC-TRIAL-005679	Full
2/12/04	Multiple ({ } bill)	1.5 hrs/$337.50	Muldoon, various relating to license and dismissal PPC-TRIAL-005679	Full
2/13/04	Unclear ({ } bill from McDermott	1 hr/$360[12]	Attorney named K. Stolte: Confer with counsel and local counsel re { } case and documentation to dismiss PPC-TRIAL-005722	Partial (1 of 2)

(CXR-32C. *See also* Tr. at 103:23-105:14.) The amount of attorney work hours spent on licensing and settlement efforts relating to licensing of the '539 patent that may be credited in full comes to 79.4 hours, or $27,506 in billables. The amount that should receive less weight or partial treatment is 45.15 attorney work hours or $14,858.75. It should be further noted, based on the evidence relating to { } decision to design around the '539 patent and the fact that it took a verdict relating to the '194 utility patent to resolve the six litigations (Tr. at 23:19-24:5,

[12] The hourly rate for K. Stolte is specified as $360. (*See* CXR-32C at PPC-TRIAL-005724.)

50:15-19, 58:9-15), that design patents in the coaxial cable industry had less licensing value than utility patents. Therefore, the weight given to the attorney work hours and billables should be reduced further.

Once again, the Administrative Law Judge finds that the decision with respect to economic domestic industry is a close one. The record shows that PPC has received only one[13] license for the '539 patent, of which only a portion actually relates to the patent at issue; that PPC has no established licensing program[14], let alone one that encompasses the '539 patent; that PPC has made no other efforts to send cease and desist letters with offers to license the '539 patent[15]; and that PPC has not engaged in other licensing offers or other talks with any persons or entities other than those involved with the single '539 patent license ({ }). On balance, the Administrative Law Judge finds that PPC's evidence does not demonstrate "substantial" investment in exploitation of the '539 patent through its licensing efforts, and therefore does not support a finding of economic domestic industry with respect to the '539 patent.

III. CONCLUSIONS OF LAW

1. A domestic industry does not exist, as required by Section 337.
2. With respect to Defaulting Respondents, it has been established that no violation exists of Section 337 for the '539 patent.

---

[13] According to the Commission, the Administrative Law Judge should consider "the presence and number of licenses." Commission Opinion at 54-56.

[14] Another consideration described by the Commission is the presence of "a concerted licensing program or effort." Commission Opinion at 54-56.

[15] According to the Commission, the Administrative Law Judge should consider "the presence of documents or activities soliciting licenses" and whether PPC was involved in "drafting and sending cease and desist letters." Commission Opinion at 50, 54-56.

IV. REMAND INITIAL DETERMINATION

Based on the foregoing, it is the REMAND INITIAL DETERMINATION ("RID") of this Administrative Law Judge that a domestic industry does not exist that practices U.S. Patent No. D440,539.

The Administrative Law Judge further determines that with respect to Defaulting Respondents, a violation of Section 337 of the Tariff Act of 1930, as amended, has not occurred in the importation into the United States, the sale for importation, or the sale within the United States after importation of certain coaxial cable connectors by reason of infringement the claim of United States Patent No. D440,539.

Further, this RID, together with the record of the remand hearing in this Investigation consisting of:

(1) the transcript of the remand hearing, with appropriate corrections as may hereafter be ordered, and

(2) the remand exhibits received into evidence in this Investigation, as listed in the attached exhibit lists in **Appendix A**,

are CERTIFIED to the Commission. In accordance with 19 C.F.R. § 210.39(c), all material found to be confidential by the undersigned under 19 C.F.R. § 210.5 is to be given *in camera* treatment.

The Secretary shall serve a public version of this RID upon all parties of record and the confidential version upon counsel who are signatories to the Protective Order (Order No. 1) issued in this Investigation, and upon the Commission Investigative Attorney.

Within seven days of the date of this document, each party shall submit to the office of the Administrative Law Judge a statement as to whether or not it seeks to have any portion of this document deleted from the public version. The parties' submissions must be made by hard copy by the aforementioned date.

Any party seeking to have any portion of this document deleted from the public version thereof must submit to this office a copy of this document with red brackets indicating any portion asserted to contain confidential business information by the aforementioned date. The parties' submission concerning the public version of this document need not be filed with the Commission Secretary.

SO ORDERED.

E. James Gildea
Administrative Law Judge

APPENDIX A

EXHIBIT LISTS

RODE & QUALEY

ATTORNEYS AT LAW

55 WEST 39TH STREET
NEW YORK, N.Y. 10018
(212) 944-7333

MICHAEL S. O'ROURKE
PATRICK D. GILL
R. BRIAN BURKE
WILLIAM J. MALONEY
ELEANORE KELLY-KOBAYASHI

FACSIMILE: (212) 719-1828
WEBSITE:
WWW.RODE-QUALEY.COM
E-MAIL:
TRADELAW@RODE-QUALEY.COM

VIA EDIS

May 4, 2010

The Honorable Marilyn R. Abbott, Secretary
U.S. International Trade Commission
500 E Street, S. W., Room 112A
Washington, D.C. 20436

Re: *Coaxial Cable Connectors and Components Thereof and Products Containing Same*, Investigation No. 337-TA-650

Dear Secretary Abbott:

On behalf of the Complainant, John Mezzalingua Associates, Inc, d/b/a PPC, Inc. ("PPC"), please find enclosed Complainant's Final Remand Hearing Exhibit List.

Respectfully submitted,

RODE & QUALEY

By: R. Brian Burke

cc: all Counsel on record

UNITED STATES INTERNATIONAL TRADE COMMISSION

Washington, D.C. 20436
Before: The Honorable E. James Gildea
Administrative Law Judge

In the Matter of:	)	
	)	
	)	
CERTAIN COAXIAL	)	Investigation No. 337-TA-650
CABLE CONNECTORS AND	)	
COMPONENTS THEREOF AND	)	
PRODUCTS CONTAINING SAME	)	

COMPLAINANT'S REMAND HEARING EXHIBIT LIST

Complainant's Remand Ex. #	Exhibit Description	Purpose	Witness(es)	Document Date	Trial Bates #	Cross Reference	Status
CXR-1C	Domestic industry investment and expenditure information on EX Series connectors	Domestic Industry	J. Young	--	PPC-TRIAL-000215	Complaint Ex. 47 Previously CX-36C	Rejected
CXR-2C	Summary of domestic industry investment and expenditures for practicing asserted patents in United States	Domestic Industry	J. Young	--	PPC-TRIAL-000217	Complaint Ex. 49 Previously CX-38C	Rejected
CXR-3C	Pictures from PPC Syracuse facility of EX Series manufacturing operations	Domestic Industry	N. Montena	--	PPC-TRIAL-000218 thru PPC-TRIAL-000224	Complaint Ex. 50 Previously CX-39C	Rejected

COMPLAINANT'S REMAND HEARING EXHIBIT LIST

Complainant's Remand Ex. #	Exhibit Description	Purpose	Witness(es)	Document Date	Trial Bates #	Cross Reference	Status
CXR-4C	Declaration of John Young, PPC Assistant Controller	Domestic Industry	J. Young	02/26/09	PPC-TRIAL-001249 thru PPC-TRIAL-001255	PPC Sum. Determination Ex. 1 (with no declaration exhibits) Previously CX-44C	Received
CXR-5C	Worldwide sales history for EX series connectors	Domestic Industry	J. Young	2004-2009	PPC-TRIAL-001265 thru PPC-TRIAL-001271	PPC Sum. Determination Ex. 1, Ex. B Previously CX-46C	Rejected
CXR-6C	Worldwide production history for EX series connectors	Domestic Industry	J. Young	2004-2009	PPC-TRIAL-001273 thru PPC-TRIAL-001274	PPC Sum. Determination Ex. 1, Ex. D Previously CX-48C	Rejected
CXR-7C	PPC financial statement of total investment in property, plant and equipment for Headquarters in Syracuse, NY	Domestic Industry	J. Young	2007-2008	PPC-TRIAL-001275	PPC Sum. Determination Ex. 1, Ex. E Previously CX-49C	Rejected
CXR-8C	PPC report on investment in plant and equipment at the East Syracuse facility	Domestic Industry	J. Young	1998 – 2009	PPC-TRIAL-001276 thru PPC-TRIAL-001278	PPC Sum. Determination Ex. 1, Ex. F Previously CX-50C	Rejected
CXR-9C	PPC CMP and EX Series connector labor costs for East Syracuse facility	Domestic Industry	J. Young	2007	PPC-TRIAL-001279 thru PPC-TRIAL-001280	PPC Sum. Determination Ex. 1, Ex. G Previously CX-51C	Rejected
CXR-10C	PPC spreadsheet detailing royalty income from current and expired licenses	Domestic Industry	J. Young	2004 – 2008	PPC-TRIAL-001281 thru PPC-TRIAL-001285	PPC Sum. Determination Ex. 1, Ex. H Previously CX-52C	Received

COMPLAINANT'S REMAND HEARING EXHIBIT LIST

Complainant's Remand Ex. #	Exhibit Description	Purpose	Witness(es)	Document Date	Trial Bates #	Cross Reference	Status
CXR-11C	PPC spreadsheet detailing legal expenditures regarding the '194 and '539 Patents.	Domestic Industry	J. Young	2004 – 2008	PPC-TRIAL-001286 thru PPC-TRIAL-001287	PPC Sum. Determination Ex. 1, Ex. I (Part) Previously CX-53C (Part)	Received
CXR-12C	Declaration of David Rahner, PPC Director of Manufacturing Engineering	Domestic Industry	--	02/23/09	PPC-TRIAL-001555 thru PPC-TRIAL-001563	PPC Sum. Determination Ex. 18 (with no declaration exhibits) Previously CX-72C	Rejected
CXR-13C	PPC material / process flow chart for EX series connectors	Domestic Industry	--	--	PPC-TRIAL-001567	PPC Sum. Determination Ex. 18, Ex. C Previously CX-75C	Rejected
CXR-14C	Spreadsheet showing sourcing of components used at the principal facilities manufacturing EX series connectors	Domestic Industry	--	2008	PPC-TRIAL-001568 thru PPC-TRIAL-001572	PPC Sum. Determination Ex. 18, Ex. D Previously CX-76C	Rejected
CXR-15C	Calculation allocating production floor space at the East Syracuse facility for production of the CMP and EX series connectors	Domestic Industry	--	--	PPC-TRIAL-001573	PPC Sum. Determination Ex. 18, Ex. E Previously CX-77C	Rejected
CXR-16C	Spreadsheet of hours worked by the PPC Manufacturing Engineering Dept at East Syracuse	Domestic Industry	--	08/01/08 – 02/11/09	PPC-TRIAL-001574	PPC Sum. Determination Ex. 18, Ex. F Previously CX-78C	Rejected
CXR-17C	Active Employee Listing for the Manufacturing Engineering Dept at East Syracuse facility	Domestic Industry	--	2008	PPC-TRIAL-001575	PPC Sum. Determination Ex. 18, Ex. G Previously CX-79C	Rejected

COMPLAINANT'S REMAND HEARING EXHIBIT LIST

Complainant's Remand Ex. #	Exhibit Description	Purpose	Witness(es)	Document Date	Trial Bates #	Cross Reference	Status
CXR-18C	Declaration of David Jackson, PPC Vice President of Engineering	Domestic Industry	--	02/25/09	PPC-TRIAL-001576 thru PPC-TRIAL-001578	PPC Sum. Determination Ex. 19 (with no declaration exhibits) Previously CX-80C	Rejected
CXR-19C	Spreadsheet with breakdown of research and development work costs for CMP and EX series connectors	Domestic Industry	--	2004-2008	PPC-TRIAL-001579	PPC Sum. Determination Ex. 19, Ex. A Previously CX-81C	Rejected
CXR-20	Curriculum Vitae of Dr. Charles A. Eldering	Domestic Industry	C. Eldering	--	PPC-TRIAL-001746 thru PPC-TRIAL-001753	PPC Sum. Determination Ex. 42, Ex. A Previously CX-93	Withdrawn
CXR-21C	500001 JMA vs. { } Spreadsheet	Domestic Industry	J. Young	4/09/2010	PPC-TRIAL-005402	--	Received
CXR-22C	500020 JMA vs. { } Spreadsheet	Domestic Industry	J. Young	4/09/2010	PPC-TRIAL-005403 thru PPC-TRIAL-005405	--	Received
CXR-23C	500005 { } v. JMA Spreadsheet	Domestic Industry	J. Young	4/09/2010	PPC-TRIAL-005406	--	Received
CXR-24C	500000 JMA vs. Gilbert Engineering AZ Spreadsheet	Domestic Industry	J. Young	4/09/2010	PPC-TRIAL-005407 thru PPC-TRIAL-005408	--	Received
CXR-25C	500021 JMA vs. Gilbert Madison WI Spreadsheet	Domestic Industry	J. Young	--	PPC-TRIAL-005409 thru PPC-TRIAL-005411	--	Received
CXR-26C	JMA v. { } Spreadsheet	Domestic Industry	J. Young	--	PPC-TRIAL-005412	--	Received

COMPLAINANT'S REMAND HEARING EXHIBIT LIST

Complainant's Remand Ex. #	Exhibit Description	Purpose	Witness(es)	Document Date	Trial Bates #	Cross Reference	Status
CXR-27C	500040 { } v. JMA (Denver #2) Spreadsheet	Domestic Industry	J. Young	--	PPC-TRIAL-005413	--	Received
CXR-28C	500001 JMA vs. { } – Bills	Domestic Industry	J. Young	--	PPC-TRIAL-005414 thru PPC-TRIAL-005494	--	Received
CXR-29C	500020 JMA v. { } Bills	Domestic Industry	J. Young	--	PPC-TRIAL-005495 thru PPC-TRIAL-005512	--	Received
CXR-30C	500000 JMA vs. Gilbert Engineering (AZ) – Bills	Domestic Industry	J. Young	--	PPC-TRIAL-005513 thru PPC-TRIAL-005649	--	Received
CXR-31C	Morrison Cohen – Bills	Domestic Industry	J. Young	--	PPC-TRIAL-005650 thru PPC-TRIAL-005657	--	Received
CXR-32C	Settlement/Licensing Excerpts from Legal Bills	Domestic Industry	J. Young	--	PPC-TRIAL-005658 thru PPC-TRIAL-005745	--	Received
CXR-33C	Manual Spreadsheet Supporting Young Declaration	Domestic Industry	J. Young	--	PPC-TRIAL-005746 thru PPC-TRIAL-005747	--	Received
CXR-34C	Settlement Agreement - PPC and { }	Domestic Industry	S. Malak	02/06/2004	PPC-TRIAL-005748 thru PPC-TRIAL-005771	--	Received
CXR-35C	License Agreement - PPC and { }	Domestic Industry	S. Malak	02/08/2004	PPC-TRIAL-005772 thru PPC-TRIAL-005797	--	Received
CXR-36C	Settlement Agreement - Corning and PPC	Domestic Industry	S. Malak	02/12/2004	PPC-TRIAL-005798 thru PPC-TRIAL-005814	--	Withdrawn
CXR-37	{ } Website page	Domestic Industry	S. Malak	04/21/2010		--	Received
CXR-38	Docket Report for PPC-{ }	Domestic Industry	S. Malak	04/21/2010	PPC-TRIAL-005817 thru PPC-TRIAL-005831	--	Withdrawn

COMPLAINANT'S REMAND HEARING EXHIBIT LIST

Complainant's Remand Ex. #	Exhibit Description	Purpose	Witness(es)	Document Date	Trial Bates #	Cross Reference	Status
CXR-39	Docket Report for PPC- Corning Gilbert (AZ)	Domestic Industry	S. Malak	04/21/2010	PPC-TRIAL-005832 thru PPC-TRIAL-005848	--	Withdrawn
CXR-40	PPC Design Patents	Domestic Industry	S. Malak	--	PPC-TRIAL-005849 thru PPC-TRIAL-005947	--	Rejected
CXR-41C	PPC Layout List	Domestic Industry	N. Montena	4/19/2010	PPC-TRIAL-005948 thru PPC-TRIAL-005950	--	Rejected
CXR-42C	Tooling Drawing 10192-10 - PPC Model EX6 (Original) Nut	Domestic Industry	N. Montena	9/30/1997	PPC-TRIAL-005951 thru PPC-TRIAL-005952	--	Rejected
CXR-43C	Nonconforming Material Report - PPC Model EX6 (Original)	Domestic Industry	N. Montena	4/19/2010	PPC-TRIAL-005953 thru PPC-TRIAL-005958	--	Rejected
CXR-44	Photograph - PPC Model EX6 (1999) on cable	Domestic Industry	N. Montena	--	PPC-TRIAL-005959	--	Withdrawn
CXR-45	Photograph - PPC model EX6 (Original) on Cable	Domestic Industry	N. Montena	--	PPC-TRIAL-005960		Rejected
CXR-46C	JMA v. { } Bills	Domestic Industry	J. Young	--	PPC-TRIAL-005962 thru PPC-TRIAL-00969	--	Received
CXR-47C	Spreadsheet showing Settlement/Licensing Excerpts from Legal Bills	Domestic Industry	J. Young	--	PPC-TRIAL-005970 thru PPC-TRIAL-005981		Received
CDXR-1	Claim chart illustrating practice of the '539 patent	Domestic Industry	C. Eldering	--	PPC-TRIAL-005961	--	Withdrawn
CPXR-1	Physical Exhibit - PPC model EX6	Domestic Industry	N. Montena	--	--	Complaint Phys. Ex. 1 Previously CPX-1	Withdrawn
CPXR-2	Physical Exhibit - PPC model EX6 (Original) on Cable	Domestic Industry	N. Montena	--	--	--	Rejected
CPXR-3	Physical Exhibit - PPC Model EX6 (1999) on cable	Domestic Industry	N. Montena	--	--	--	Withdrawn

CERTIFICATE OF SERVICE

I hereby certify that on May 4, 2010, the foregoing "COMPLAINANT'S REMAND HEARING EXHIBIT LIST" was served on the following as indicated:

The Honorable Marilyn R. Abbott Secretary U.S. International Trade Commission 500 E Street, S.W., Room 112-A Washington, DC 20436	**X** Via EDIS E-Filing ☐ Via Hand Delivery (original plus 6 copies) ☐ Via First Class Mail ☐ Via Overnight Courier ☐ Via Facsimile ☐ Via E-mail
The Honorable E. James Gildea Administrative Law Judge U.S. International Trade Commission 500 E Street, S.W., Room 317-E Washington, DC 20436	**X** Via Hand Delivery (2 copies) ☐ Via First Class Mail ☐ Via Overnight Courier ☐ Via Facsimile ☐ Via E-mail
Sarah Zimmerman, Esq. Attorney Advisor to Hon. E. James Gildea U.S. International Trade Commission 500 E Street, S.W., Room 317-M Washington, DC 20436 sarah.zimmerman@usitc.gov	☐ Via Hand Delivery ☐ Via First Class Mail ☐ Via Overnight Courier ☐ Via Facsimile **X** Via E-mail
Kevin Baer, Esq. Office of Unfair Import Investigations U.S. International Trade Commission 500 E Street, S.W. Washington, DC 20436	**X** Via Hand Delivery ☐ Via First Class Mail ☐ Via Overnight Courier ☐ Via Facsimile **X** Via E-mail

UNITED STATES INTERNATIONAL TRADE COMMISSION
Washington, D.C.

Before E. James Gildea
Administrative Law Judge

In the Matter of

CERTAIN COAXIAL CABLE CONNECTORS AND COMPONENTS OF THE SAME AND PRODUCTS CONTAINING THE SAME

Inv. No. 337-TA-650

COMMISSION INVESTIGATIVE STAFF'S REMAND FINAL EXHIBIT LIST

(May 4, 2010)

Exhibit No.	Description	Witness	Purpose	Status of Receipt
SXR-1				Withdrawn
SXR-2				Withdrawn
SXR-3				Withdrawn
SRX-4				Withdrawn
SRX-5	{ } Judgment (Jan. 22, 2002) (Staff_Remand 000066-000068)	Malak	Domestic Industry	Received on April 27, 2010
SRX-6	{ } Jury Verdict (Jan. 22, 2002) (Staff_Remand 000069-000070)	Malak	Domestic Industry	Received on April 27, 2010
SRX-7				Withdrawn
SRX-8				Withdrawn
SRX-9				Withdrawn

SRX-10	{ } Supplemental Judgment (April 3, 2003) (Staff_Remand 000125-000127)	Malak	Domestic Industry	Received on April 27, 2010
SRX-11				Withdrawn
SRX-12				Withdrawn
SRX-13				Withdrawn
SRX-14				Withdrawn
SRX-15				Withdrawn

Respectfully submitted,

s/ Kevin Baer

Lynn I. Levine, Director
Kevin Baer, Investigative Attorney
OFFICE OF UNFAIR IMPORT INVESTIGATIONS
U.S. International Trade Commission
500 E Street, SW., Suite 401
Washington, D.C. 20436
(202) 205-2221
(202) 205-2158 (Facsimile)

May 4, 2010

Certain Coaxial Cable Connectors **Investigation No. 337-TA-650**

CERTIFICATE OF SERVICE

The undersigned certifies that on May 4, 2010, he caused the foregoing Commission Investigative Staff's Remand Final Exhibit List to be served by hand upon Administrative Law Judge E. James Gildea (2 copies), and served upon the parties via first class mail and email:

For Complainant John Mezzalingua Associates, Inc. d/b/a PPC, Inc.

Patrick D. Gill
R. Brian Burke
RODE & QUALEY
55 West 39th Street, Suite 600
New York, NY 10018

patrickdgill@rode-qualey.com

For Respondent Gem Electronics and Fu Ching Technical Industrial Co., Ltd.

John R. Horvack, Jr.
Sherwin M. Yoder
CARMODY & TORRANCE, LLP
195 Church Street
New Haven, CT 06509

JHorvack@carmodylaw.com

s/Kevin Baer

Kevin Baer
Investigative Attorney
OFFICE OF UNFAIR IMPORT INVESTIGATIONS
U.S. International Trade Commission
500 E Street, S.W., Suite 401
Washington, D.C. 20436
202.205.2221
202.205.2158 (fax)

IN THE MATTER OF CERTAIN COAXIAL CABLE CONNECTORS AND COMPONENTS THEREOF AND PRODUCTS CONTAINING SAME **337-TA-650**

CERTIFICATE OF SERVICE

I, Marilyn R. Abbott, hereby certify that the attached has been served upon, **Kevin Baer, Esq.,** Commission Investigative Attorney, and the following parties via first class mail and air mail where necessary on June 15, **2010.**

Marilyn R. Abbott
JNG

Marilyn R. Abbott, Secretary
U.S. International Trade Commission
500 E Street, S.W., Room 112A
Washington, DC 20436

FOR COMPLAINANT JOHN MEZZALINGUA ASSOCIATES, INC., d/b/a PPC, INC.

Patrick D. Gill, Esq.
RODE & QUALEY
55 W. 39th Street
New York, NY 10018

( )Via Hand Delivery
(✓)Via Overnight Mail
( )Via First Class Mail
( )Other:_____

FOR RESPONDENT GEM ELECTRONICS & FU CHING TECHNICAL INDUSTRIAL CO., LTD.

John R. Horvack, Jr., Esq.
Sherwin M. Yoder, Esq.
CARMODY & TORRANCE, LLP
195 Church Street
New Haven, CT 06509

( )Via Hand Delivery
(✓)Via Overnight Mail
( )Via First Class Mail
( )Other:_____

IN THE MATTER OF CERTAIN COAXIAL CABLE CONNECTORS AND COMPONENTS THEREOF AND PRODUCTS CONTAINING SAME **337-TA-650**

PUBLIC MAILING LIST

Heather Hall
LEXIS - NEXIS
9443 Springboro Pike
Miamisburg, OH 45342

( )Via Hand Delivery
(X)Via Overnight Mail
( )Via First Class Mail
( )Other:_____

Kenneth Clair
Thomson West
1100 – 13th Street NW
Suite 200
Washington, DC 20005

( )Via Hand Delivery
(X)Via Overnight Mail
( )Via First Class Mail
( )Other:_____

UNITED STATES INTERNATIONAL TRADE COMMISSION
Washington, D.C. 20436

In the Matter of **CERTAIN COAXIAL CABLE CONNECTORS AND COMPONENTS THEREOF AND PRODUCTS CONTAINING SAME**	**Investigation No. 337-TA-650**

ORDER: DENIAL OF COMPLAINANT'S REQUEST FOR RECONSIDERATION

The Commission instituted this investigation on May 30, 2008, based on a complaint filed by John Mezzalingua Associates, Inc. d/b/a PPC, Inc. of East Syracuse, New York ("PPC"). 73 *Fed. Reg.* 31145 (May 30, 2008). The complaint alleged violations of section 337 of the Tariff Act of 1930 (19 U.S.C. § 1337) in the importation into the United States, the sale for importation, and the sale within the United States after importation of certain coaxial cable connectors and components thereof and products containing the same by reason of infringement of U.S. Patent No. 5,470,257 ("the '257 patent"), among others.

On October 13, 2009, the presiding administrative law judge ("ALJ") issued an initial determination ("ID") finding, among other things, a violation of section 337 by reason of infringement of the '257 patent. On December 14, 2009, the Commission determined to review the subject ID and asked for briefing on questions pertaining to a particular modification of the ALJ's construction of the term "engagement means" and its potential impact on the ALJ's finding that PPC meets the domestic industry requirement. On March 31, 2010, the Commission issued its final determination, which among other things, modified the ALJ's construction of "engagement means," reversed the ALJ's finding that PPC's domestic product meets the

technical prong of the domestic industry requirement based on its modified claim construction, and reversed the ALJ's finding that a violation of section 337 occurred. Commission Opinion (Mar. 31, 2010); 75 *Fed. Reg.* 18236 (Apr. 9, 2010).

On April 14, 2010, PPC filed a petition for reconsideration of these findings and conclusions. On April 20, 2010, respondents Fu-Ching Technical Industry Co. Ltd. and Gem Electronics, Inc. filed a reply in opposition to PPC's petition for reconsideration.

Commission Rule 210.47 provides in pertinent part:

> Within 14 days after service of a Commission determination, any party may file with the Commission a petition for reconsideration of such determination or any action ordered to be taken thereunder, setting forth the relief desired and the grounds in support thereof. Any petition filed under this section must be confined to new questions raised by the determination or action ordered to be taken thereunder and upon which the petitioner had no opportunity to submit arguments....

19 C.F.R. § 210.47.

PPC's petition for reconsideration of the Commission's final determination neither raises new questions nor presents arguments that PPC did not have an opportunity to make in previous briefing before the Commission. As such, we find that PPC's petition for reconsideration does not satisfy the requirements of Commission Rule 210.47.

Upon consideration of the record and the submissions on this matter, the Commission hereby ORDERS that:

1. PPC's petition for reconsideration of the Commission's final determination is DENIED.

2. The Secretary will serve this Order on all parties to the investigation.

By order of the Commission.

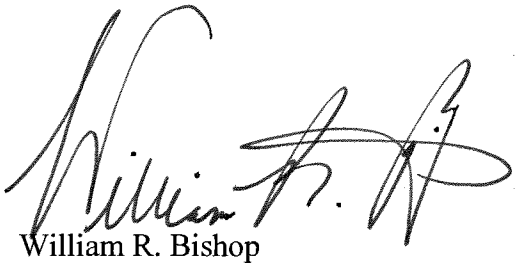

William R. Bishop
Acting Secretary to the Commission

Issued: May 21, 2010

CERTAIN COAXIAL CABLE CONNECTORS AND COMPONENTS THEREOF AND PRODUCTS CONTAINING SAME **337-TA-650**

CERTIFICATE OF SERVICE

I, Marilyn R. Abbott, hereby certify that the attached **ORDER: DENIAL OF COMPLAINANT'S REQUEST FOR RECONSIDERATION** has been served by hand upon the Commission Investigative Attorney, Kevin Baer, Esq., and the following parties as indicated on May 21, 2010.

Marilyn R. Abbott, Secretary
U.S. International Trade Commission
500 E Street, SW
Washington, DC 20436

On Behalf of Complainant John Mezzalingua Associates, Inc.:

Patrick D. Gill, Esq.
RODE & QUALEY
55 W. 39th Street
New York, NY 10018

( ) Via Hand Delivery
( ) Via Overnight Mail
(✓) Via First Class Mail
( ) Other: _____

On Behalf of Respondents GEM Electronics and Fu Ching Technical Industry Co., LTD.:

John R. Horvack, Jr., Esq.
CARMODY & TORRANCE, LLP
195 Church Street
New Haven, CT 06509

( ) Via Hand Delivery
( ) Via Overnight Mail
(✓) Via First Class Mail
( ) Other: _____

PUBLIC VERSION

In the Matter of CERTAIN COAXIAL CABLE CONNECTORS AND COMPONENTS THEREOF AND PRODUCTS CONTAINING SAME	Investigation No. 337-TA-650

COMMISSION OPINION

I. INTRODUCTION

On October 13, 2009, the presiding administrative law judge ("ALJ") issued his final initial determination ("ID") in the above-referenced investigation. The ALJ found a violation of section 337 of the Tariff Act of 1930, as amended, 19 U.S.C. § 1337, by four defaulting respondents, Hanjiang Fei Yu Electronics Equipment Factory of China ("Fei Yu"); Zhongguang Electronics of China ("ZE"); Yangzhou Zhongguang Electronics Co. of China ("Yangzhou ZE"); and Yangzhou Zhongguang Foreign Trade Co. Ltd. of China ("Yangzhou FTC") (collectively, "the defaulting respondents"), in connection with U.S. Patent Nos. 6,558,194 ("the '194 patent"); 5,470,257 ("the '257 patent"); D519,076 ("the '076 design patent"); and D440,539 ("the '539 design patent"). The ALJ found no violation of section 337 by the only two respondents who participated in the investigation: Fu-Ching Technical Industry Co., Ltd. of Taiwan ("Fu-Ching") and Gem Electronics, Inc. of Windsor, Connecticut ("Gem") (collectively, "the active respondents").

The Commission determined not to review the ALJ's determination that the defaulting respondents violated section 337 with respect to the '194 and '076 patents and has determined to issue a general exclusion order covering articles that infringe the asserted claims of the '194

patent and a limited exclusion order directed to the articles of the defaulting respondents that infringe the claim of the '076 design patent. The Commission has further determined to modify the ALJ's construction of two claim terms found in claim 1 of the '257 patent and to affirm the ALJ's determination that the accused products of the active respondents Fu-Ching and Gem do not infringe claim 1 of the '257 patent for modified reasons, but reverse his conclusion that complainant's product meets the technical prong of the domestic industry requirement and that the four defaulting respondents violate section 337 with respect to the '257 patent. Finally, the Commission has determined to vacate the ALJ's finding that a domestic industry exists under section 337(a)(3)(C) with respect to the '539 patent and remand to the ALJ for further proceedings consistent with this opinion. We adopt the ALJ's ID to the extent it is not inconsistent with this opinion.

II. BACKGROUND

A. Procedural History

The Commission instituted this investigation on May 30, 2008, based on a complaint filed by John Mezzalingua Associates, Inc. d/b/a PPC, Inc. ("PPC") of East Syracuse, New York. 73 *Fed. Reg.* 31145 (May 30, 2008). The complaint alleged violations of section 337 in the importation into the United States, the sale for importation, and the sale within the United States after importation of certain coaxial cable connectors and components thereof and products containing the same by reason of infringement of claims 1 and 2 of the '194 patent, claims 1 and 5 of the '257 patent, the claim of the '076 design patent, and the claim of the '539 design patent. The complaint named eight respondents, which are identified below along with their current

status with respect to this investigation.

1. Fei Yu, ZE, Yangzhou ZE, and Yangzhou FTC were found in default by the ALJ in Order No. 8 (Sept. 22, 2008), which was not reviewed by the Commission.

2. Edali Industrial Corp. of Taiwan ("Edali") and Aska Communication Corp. of Pompano Beach, Florida ("Aska") were terminated from this investigation based on a consent order (collectively, "the terminated respondents"). Order No. 5 (July 29, 2008) (unreviewed by the Commission); Order No. 6 (Aug. 27, 2008) (unreviewed by the Commission).

3. Fu-Ching and Gem are the only participating respondents.

Complainant PPC only asserted the '257 patent against the active respondents and the '194 patent against the terminated respondents. Complainant asserted all four patents at issue, the '076, '539, '194, and '257 patents, against the defaulting respondents.

The ALJ held an evidentiary hearing from July 6, 2009 to July 14, 2009, and thereafter received post-hearing briefing from the parties. Fu-Ching and Gem were the only respondents represented at the hearing. On October 13, 2009, the ALJ issued his final ID. The ALJ found a violation of section 337 by the defaulting respondents by reason of infringement of claims 1 and 5 of the '257 patent, claims 1 and 2 of the '194 patent, the claim of the '076 design patent, and the claim of the '539 design patent. ID at 51-85. The ALJ found that the participating respondents Fu-Ching and Gem did not violate section 337 by reason of infringement of claims 1 and 5 of the '257 patent, the only claims asserted against them. ID at 76-77. The ALJ also found that a domestic industry exists in the United States with respect to all of the asserted the patents. ID at 101-10.

On October 30, 2009, PPC filed a petition for review of the ID seeking review of certain claim construction issues in connection with claim 1 of the '257 patent, including the

construction of "fastener means" and the corresponding findings of non-infringement as well as the construction of "engagement means" and the corresponding findings of non-infringement. Complainant's Petition For Review of the Initial Determination on Violation of Section 337 and Recommended Determination on Remedy and Bond ("PPC Pet.") at 1. On October 30, 2009, the Commission investigative attorney ("IA") filed a petition seeking review of the ALJ's construction of "engagement means" in claim 1 of the '257 patent, the ALJ's finding of non-infringement of claim 1 of the '257 patent by the accused products of the active respondents, and the ALJ's finding that PPC meets the economic prong of the domestic industry requirement with respect to the '539 design patent. Petition of the Office of Unfair Import Investigations for Review of the Initial Determination on Violation. The active respondents filed a contingent petition requesting review of certain findings and conclusions.[1] Joint Contingent Petition of Respondents Fu Ching Technical Industry Co. Ltd. and Gem Electronics, Inc. For Review of Initial Determination at 2. On November 9, 2009, PPC, the IA, and the active respondents filed responses to the petitions for review. Complainant's Response to Respondents' and Staff's Petitions For Review of the Initial Determination On Remedy and Bond; Response of the Office of Unfair Import Investigations to Petitions For Review of the Initial Determination on Violation; Joint Response of Respondents Fu Ching Technical Industry Co. Ltd. and Gem Electronics, Inc. To the Petitions for Review Filed By Complainant and the Office Unfair Import Investigations.

On December 14, 2009, the Commission determined to review the final ID in part and

---

[1] Under the Commission's rules, contingent petitions for review are treated as petitions for review. 19 C.F.R. § 210.43(b)(3).

requested briefing on the issues under review, remedy, the public interest, and bonding. The Commission determined to review: (1) the findings and conclusions relating to whether a violation of section 337 has occurred with respect to the '257 patent, including the issues of claim construction, infringement, validity, and domestic industry and (2) the ALJ's finding that PPC has met the domestic industry requirement for the '539 design patent. With respect to the '539 design patent, the Commission requested submissions from the public on the issue of whether a domestic industry exists under section 337(a)(3)(C).

On January 13, 2010, PPC, the active respondents, and the IA filed written submissions addressing the issues on review as well as the issues of remedy, the public interest and bonding. Complainant's Brief on Issues Under Review and on Remedy, the Public Interest, and Bonding ("PPC Br."); Respondents Fu Ching Technical Industry Co. Ltd. and Gem Electronics, Inc. Opening Brief on Review ("Resp. Br."); Brief of the Office of Unfair Imports Investigations on Issues Under Review, Remedy, the Public Interest, and Bonding ("IA Br."). In response to the Commission's request for written submissions from the public on the issue of domestic industry, comments were also received from several non-parties including (1) a submission by the law firm of Covington and Burling on behalf of Samsung Electronics America, Inc., Samsung Electronics Co., Ltd., Samsung Semiconductor, Inc., Samsung Telecommunications Amercia, LLC, Hewlett-Packard Company, Dell, Inc., Asus Computer International, Inc., Asustek Computer, Inc., and Transcend Information, Inc. (the "Samsung Group"); (2) a joint submission by Google, Inc., Cisco Systems, Inc., and Verizon Communications, Inc.; (3) a submission by Tessera, Inc.; and (4) a submission by the law firm of Hogan and Hartson, LLP. On January 27, 2010, the parties

filed response submissions. Respondents Fu Ching Technical Industry Co. Ltd. and Gem Electronics, Inc. Reply Brief on Review ("Resp. Rep. Br."); Reply Brief of the Office of Unfair Imports Investigations on Issues Under Review, Remedy, the Public Interest, and Bonding ("IA Rep. Br."); Complainant's Reply Brief on Issues Under Review and on Remedy, the Public Interest, and Bonding. Reply submissions were also received from the Samsung Group and from InterDigital Technology Corp. and InterDigital Communications, LLC. Reply Submission of Samsung Electronics America, Inc., Samsung Electronics Co., Ltd., Samsung Semiconductor, Inc., Samsung Telecommunications America, LLC, Hewlett-Packard Company, Dell Inc., Asus Computer International, Inc., Asustek Computer, Inc., and Transcend Information, Inc. in Response to the Commission's December 14, 2009 Notice to Review-in-Part a Final Determination Finding a Violation of Section 337; Non-Party Interdigital's Reply Submission Regarding Question 10 of the December 14, 2009 Commission Notice Seeking Comments.

B. Patents and Technology at Issue

The technology at issue relates to so-called "drop" coaxial cable connectors used in the telecommunications, satellite and cable television industries. ID at 6. Drop connectors are small, generally cylindrical devices that are used to mechanically and electrically connect a coaxial cable to an electronic device. *Id.* These coaxial cable connectors are frequently used outdoors and must be capable of providing a reliable pathway from the coaxial cable to the electronic device with minimum signal loss, protecting against moisture and shielding against RF leakage, while being easy to install. *Id.*

The '257 patent, entitled "Radial Compression Type Coaxial Cable End Connector,"

issued on November 28, 1995, to Andrew Szegada.[2] The '257 patent is assigned to PPC. *See* '257 patent (JX-1). Claims 1 and 5 of the '257 patent are asserted in this investigation.

The '539 design patent, entitled "Closed Compression-Type Coaxial Cable Connector" issued from a continuation application claiming priority to U.S. Patent Application No. 08/910,509, filed on August 2, 1997, which matured into U.S. Patent No. 6,153,830. *See* '539 patent (CX-3). The '539 design patent was filed on April 28, 2000, and issued on April 17, 2001. *Id.* The '539 design patent names Noah P. Montena as the sole inventor. *Id.* The '539 design patent was assigned to, and is currently owned by, PPC. *Id.*

C. Products at Issue

The products accused of infringement by PPC in this investigation are coaxial cable connectors. Fu Ching manufactures accused connectors abroad for Gem, which is located in the United States. *See* Complainant's Post Hearing Brief at 15. There are sixty different models of accused Fu Ching and Gem connectors identified in a table on pages 15-17 of the ID. Each connector has two ends, one end having a fastener for connecting to a system component and another end having a locking member for connecting to a coaxial cable. It is undisputed that the attachment between the locking member and the connector body, *i.e.*, the alleged "engagement means," is the same in all of the accused connectors of the active respondents. The accused connectors of the active respondents have nine different types of fasteners for connecting to a system component, including the F-connector, the BNC connector, and the RCA connector

[2] Only the findings related to the '257 patent and the '539 design patent are the subject of Commission review.

(male, female, and right angle male for each).

III. VIOLATION DISCUSSION

Under the Administrative Procedure Act, upon review of the initial determination of the ALJ, "the agency has all of the powers which it would have in making the initial decision except as it may limit the issues on notice or by rule." 5 U.S.C. § 557(b) (*quoted in Certain Acid-Washed Garments and Accessories*, Inv. No. 337-TA-324 (Aug. 6, 1992)); 19 C.F.R. § 210.45(C). In other words, once the Commission decides to review the decision of the ALJ, the Commission may conduct a review of the findings of fact and conclusions of law presented by the record under a *de novo* standard.

A. <u>The '257 Patent</u>

Claim 1 is the only independent claim. It is reproduced below with the disputed claim terms emphasized for clarity:

> 1. An end connector for connecting a coaxial cable to a system component, said end connector comprising:
>
> a connector body comprising a tubular inner post extending from a front end to a rear end, and including an outer collar surrounding and fixed relative to said inner post at a location disposed rearwardly of said front end, said outer collar cooperating in a radially spaced relationship with said inner post to define an annular chamber with a rear opening;
>
> **fastener means at the front end of said inner post for attaching said end connector to said system component**;
>
> a tubular locking member protruding axially into said annular chamber through said rear opening; and
>
> **engagement means** circumscribing the interior of said outer collar and the exterior of said locking member, **said engagement means coacting in circular interengagement to inseparably couple said locking member to said connector body at a first position and to accommodate limited axial movement of said locking member relative to said connector body between**

> **said first position and a second position**, said locking member coacting in a first radially spaced relationship with said inner post when in said first position to accommodate insertion of the rear end of said inner post into an end of said cable, with a central core portion of said cable being received in said inner post through said rear end and an outer annular portion of said cable being received in said annular chamber through said rear opening and between said locking member and said inner post, and said locking member coacting in a second radially spaced relationship with said inner post when in said second position to grip the outer annular portion of said cable therebetween.

1. "Fastener Means" in Claim 1 of the '257 Patent

a. Claim Construction

Claim construction begins with the language of the claims themselves. Claims should be given their ordinary and customary meaning as understood by a person of ordinary skill in the art, viewing the claim terms in the context of the entire patent. *See Phillips v. AWH Corp.,* 415 F.3d 1303, 1312-13 (Fed. Cir. 2005). The patent claim limitations at issue are drafted in means-plus-function format and are governed by 35 U.S.C. § 112, ¶ 6, which states:

> An element in a claim for a combination may be expressed as a means or step for performing a specified function without the recital of structure, material, or acts in support thereof, and such claim shall be construed to cover the corresponding structure, material, or acts described in the specification and equivalents thereof.

35 U.S.C. § 112, ¶ 6. According to the Federal Circuit, "[t]he first step in construing a means-plus-function limitation is to identify the function explicitly recited in the claim." *Asyst Tech., Inc. v. Empak, Inc.*, 268 F.3d 1364, 1369-70 (Fed. Cir. 2001). The function may only include the limitations contained in the claim language. It is improper to narrow or broaden "the scope of the function beyond the claim language." *Cardiac Pacemakers, Inc. v. St. Jude Med., Inc.*, 296 F.3d 1106, 1113 (Fed. Cir. 2002).

The next step in the analysis of a means-plus-function claim limitation "is to identify the corresponding structure set forth in the written description that performs the particular function set forth in the claim." *Asyst*, 268 F.3d at 1369-70. Corresponding structure "must not only perform the claimed function, but the specification must clearly associate the structure with performance of the function." *Cardiac Pacemakers*, 296 F.3d at 1113.

> Section 112 paragraph 6 does not 'permit incorporation of structure from the written description beyond that necessary to perform the claimed function.' Structural features that do not actually perform the recited function do not constitute corresponding structure and thus do not serve as claim limitations.

Asyst, 268 F.3d at 1369-70 (citations omitted). For example, features that enable the pertinent structure to operate as intended are not the same as corresponding structures that actually perform the stated function. *Id.* at 1371. A means-plus-function analysis is "undertaken from the perspective of a person of ordinary skill in the art." *Cardiac Pacemakers*, 296 F.3d at 1113. The other claims in a patent "may provide guidance and context for interpreting a disputed means-plus-function limitation, especially if they recite additional functions." *Wenger Mfg., Inc. v. Coating Mach. Sys., Inc.*, 239 F.3d 1225, 1233-34 (Fed. Cir. 2001). If another claim in the patent recites a separate and distinct function, "the doctrine of claim differentiation indicates that these claims are presumptively different in scope." *Id.* However, the Federal Circuit has explained that claim differentiation may not be used to circumvent the requirements of section 112, ¶ 6 but may still play a role during claim construction. *Id.* (internal citations omitted).

The term "fastener means" appears in the claim limitation "fastener means at the front end of said inner post for attaching said end connector to said system component." The parties

do not dispute that the term "fastener means" is a means-plus-function limitation and that the function is "attaching the end connector to a system component." ID at 30. The ALJ found that the corresponding structure is a "cylindrical . . . shape, internally threaded, rotatable, ***and*** *secured to the post of the end connector by way of an inner circular shoulder seated in a circular groove in the outer surface of the post at a location adjacent to the post's front end.*" *Id.* (emphasis added). In reaching this conclusion, the ALJ reasoned that the "fastener must be able to rotate relative to the connector body so that it may accomplish its attaching function by threading with a reciprocal member of the system component while the connector is terminated to a cable." ID at 33-34.

Although we agree that the ALJ properly identified the function as "attaching the end connector to a system component," we find that he erroneously required the corresponding structure to be "rotatable, and secured to the post of the end connector by way of an inner circular shoulder seated in a circular groove in the outer surface of the post at a location adjacent to the post's front end." ID at 30.

The specification illustrates the connector 10 in Figure 1 as follows:

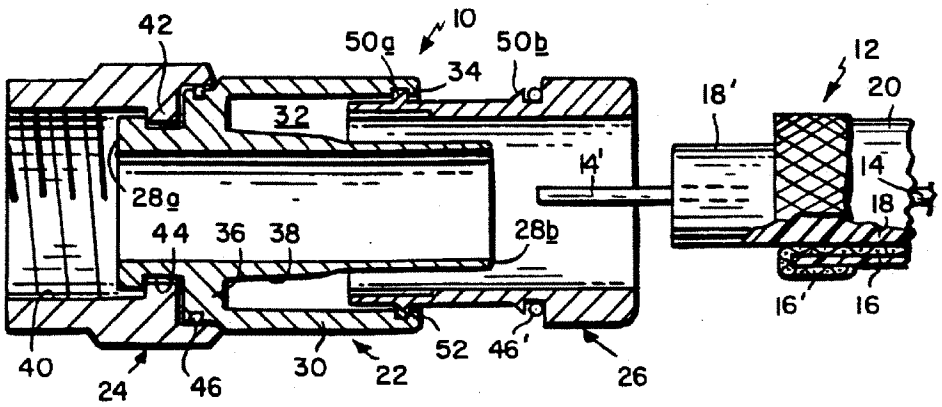

The connector 10 has a connector body 22 with a cylindrical fastener 24 at one end for engaging a system component and a tubular locking member 26 at the other end for engaging cable 12. '257 patent (JX-1), 3:30-48. The connector body 22 has a tubular inner post 28 with a front end 28a and a rear end 28b. '257 patent (JX-1), 3:49-53. The cylindrical fastener 24 is internally threaded at 40 and is provided with an inner circular shoulder 42 seated in a circular groove 44 in the outer surface of the inner post 28 at a location adjacent to the front end 28a to allow rotation of the fastener 24 relative to the inner post 28. '257 patent (JX-1), 4:3-9.

PPC argues that the corresponding structure is cylindrical as shown and internally threaded 40 as shown, but that the fastener 24 need not rotate relative to the connector body 22. We agree. As PPC points out, PPC Br. at 11, although it may be preferable to have rotation of the fastener 24 relative to the connector body 22, for example, to avoid twisting the cable 12 when the connector 10 is attached to the system component, it is not necessary to carry out the function of attaching the end connector 10 to the system component. Only the cylindrical internal threading 40 of the fastener 24 is necessary to perform the claimed attachment function. The inner circular shoulder 42 and the circular groove 44 in the outer surface of the inner post 28 allow the fastener 24 to rotate relative to the connector body 22, but do not perform the attachment function. Accordingly, they are not part of the claimed "fastener means." *See e.g., Acromed Corp. v. Sofamor Danek Group*, 253 F.3d 1371, 1382-83 (Fed. Cir. 2001) ("Under 35 U.S.C. § 112, ¶ 6, a court may not import into the claim structural limitations from the written description that are unnecessary to perform the claimed function.").

Moreover, the detailed description of the '257 patent clearly associates the internal threading 40 with the function of "attaching the end connector to a system component," but does not associate the additional components. *See* '257 patent (JX-1), 3:46-49, 4:65-67, 4:3-9. For example, the '257 patent states that: "[t]he fastener 24 is internally threaded 40" and "may then be employed to attach the connector to a system component, typically a threaded port 63 or the like." '257 patent (JX-1), 4:3-9, 65-67. Although the '257 patent states that the fastener 24 "is provided with" elements 42, 44, and 28 for rotation, there is no clear association between the attachment function and these rotational elements. *Id.* While the inner circular shoulder 42 and groove 44 may *facilitate* the attachment function; they do not *perform* the attachment function and therefore are not part of the corresponding structure.

The language of claim 1 also provides guidance. Claim 1 requires that the "fastener means" be located "at the front end of said inner post." '257 patent (JX-1), 5:67. The '257 patent refers to the "front end" of the inner post using reference "28a." The front end 28a of the inner post 28 is the end surface of the inner post 28 that faces the system component, as shown below:

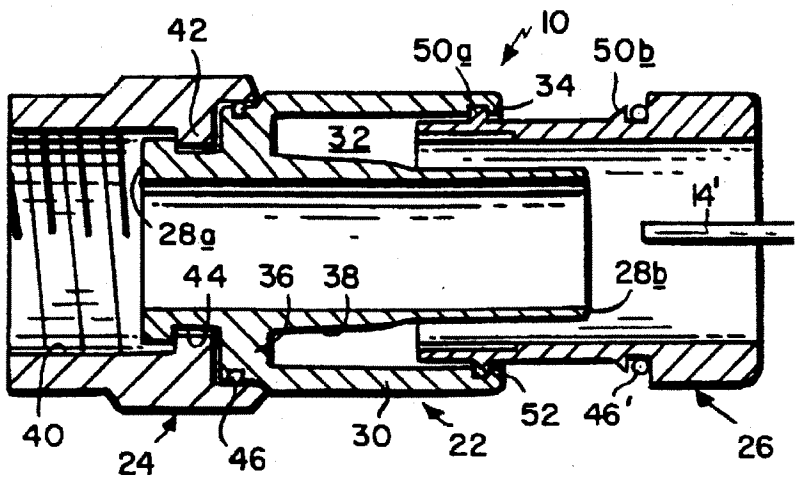

'257 patent (JX-1), Figure 1. The only component of the fastener 24 that is located ***at*** the front end 28a of the inner post 28 is the internal threading 40. Both the shoulder 42 and groove 44 are located ***behind*** the front end 28a of the inner post 28 and therefore do not form part of the claimed "fastener means." Accordingly, we find that the correct corresponding structure for the term "fastener means" is cylindrical in shape and internally threaded.

b. Infringement by the Active Respondents

An accused device literally infringes a patent claim if it contains each limitation recited in the claim exactly. *Litton Sys., Inc. v. Honeywell, Inc.*, 140 F.3d 1449, 1454 (Fed. Cir. 1998). The determination of whether there is literal infringement with respect to a means-plus-function claim limitation consists of finding (i) "identity of claimed function" and (ii) "[e]quivalence between the accused structure and that set forth in the specification[.]" *Minks v. Polaris Indus., Inc.*, 546 F.3d 1364, 1378 (Fed. Cir. 2008). The function specified in the means-plus-function claim limitation and the corresponding function of the accused device must be identical. *Id.* "[O]nce identity of function is established, the test for infringement is whether the structure of the accused device performs in substantially the same way to achieve substantially the same result as the structure disclosed in the . . . patent." *Id.* at 1379. A difference in physical structure, by itself, is not determinative. *Id.* Indeed, "[e]vidence of known interchangeability between structure in the accused device and the disclosed structure has . . . been considered an important factor." *Id.*

At issue are all nine Fu-Ching (and Gem) connector types, including F-connectors, BNC connectors, and RCA connectors (male, female, and right angle male for each). All male connectors at issue have a cylindrical structure with a central conductor extending throughout. CPX-47; '257 patent (JX-1) Figure 5, element 14'. The central conductor is received by a female connector. CPX-47; '257 patent (JX-1) Figure 5, element 63. In all connector types at issue, the inner surface of the cylindrical structure of the male connector engages the outer surface of the female connector.

The ALJ found that only the F-connector male meets the claimed "fastener means" limitation, because it is internally threaded in the same manner as the corresponding structure. ID at 64. The ALJ found that all accused connector types meet the "identity of claimed function," but that the F-connector female, BNC connector, and RCA connector types are different from the corresponding structure of the claimed "fastener means." ID at 62-63. The ALJ further found that the accused connector types are not equivalent to the corresponding structure of the claimed "fastener means" because they do not perform the claimed function in the "same way" as the corresponding structure of the '257 patent. ID at 63. The ALJ based his determination on the fact that the F-connector female is externally threaded, as opposed to internally threaded like the corresponding structure in the '257 patent. *Id.* He found that the BNC and RCA connectors, which use fastening mechanisms other than threading, require a push or a push and partial twist lock motion to couple and therefore do not perform the function in the same way as the corresponding structure of the '257 patent. ID at 63. The Commission determined to review these findings.

The ALJ improperly required the allegedly equivalent fastener types to perform the claimed function in the ***same way*** as the corresponding structure from the '257 patent. ID at 63. All that is required for a structure to be equivalent for the purposes of literal infringement of a means-plus-function limitation, however, is that it perform the claimed function in ***substantially the same way*** as the claimed structure. *Applied Med. Res. Corp. v. U.S. Surgical Corp.*, 448 F.3d 1324, 1333 (Fed. Cir. 2006). In determining means-plus-function equivalence, "the context of the invention should be considered," and "a rigid comparison of physical structure in a vacuum may be inappropriate . . . ." *IMS Tech., Inc. v. Haas Automation, Inc.*, 206 F.3d 1422, 1436 (Fed. Cir. 2000); *see also Utah Med. Prods., Inc. v. Graphic Controls Corp.*, 350 F.3d 1376, 1384 (Fed. Cir. 2003) ("[T]he equivalents analysis under section 112, paragraph 6, proceeds with reference to the context of the invention and the relevant field of art."). Thus, we must consider whether the external threading of the F-connector female and the push/partial twist locks of the RCA and BNC connector types perform the "fastener means" function in substantially the same way as the internal threading 40 shown in the '257 patent.

In considering means-plus-function infringement, the Federal Circuit has held that "when in a claimed 'means' limitation the disclosed physical structure is of little or no importance to the claimed invention, there may be a broader range of equivalent structures than if the physical characteristics of the structure are critical in performing the claimed function." *IMS Tech.*, 206 F.3d at 1436. Citing *IMS Tech.*, the Commission asked the parties in Question 2 of its review notice about the importance of the structure of the "fastener means" to the '257 invention. In response to this question, the active respondents and the IA focused on whether the claimed

"fastener means" itself is important to the '257 invention. *See e.g.,* Resp. Br. at 46 ("The fastener means plays a critical role in connecting the cable to a system component" and "comprises half of the claimed connector's functionality."); IA Br. at 15 ("[T]he record demonstrates that the fastener means is essential to the claimed invention"); IA Rep. Br. at 3-4. Our inquiry, however, was whether "there [is] evidence in the record that the ***structure*** of the disclosed 'fastener means' is important to the invention of claim 1 of the '257 patent." Commission Review Notice (Dec. 14, 2009) (emphasis added).

Based on an examination of the '257 specification, we find that the structure of the claimed "fastener means" is not a focus of the '257 patent. Indeed, the structure of the fastener 24 is not even mentioned in the "Summary of the Invention" section, and is identified only once throughout the text of the patent. *See* '257 patent (JX-1), 4: 3-9. Elsewhere in the patent's description, the structure is simply referred to generally as "fastener 24." Moreover, none of the claims of the '257 patent specify any structure for the "fastener means" or the "system component" to which it connects. Importantly, in at least two passages, the '257 patent's description of the "system component" to which the structure of the fastener 24 connects suggests that structures other than the cylindrical internal threading 40 are possible.

- "The fastener 24 may then be employed to attach the connector to a system component, ***typically a threaded port 63 or the like***." '257 patent (JX-1), 4:65-67 (emphasis added).
- "The design of the fastener 24 can also be changed to suit differing applications." '257 patent (JX-1), 5:53-55.

The '257 patent focuses on how the locking member 26 interacts with and engages the connector body 22, not how the connector body 22 is fastened to the system component. Accordingly, we

find that the structure of the claimed "fastener means" is of little or no importance to the '257 invention and is therefore entitled to a broader range of equivalents. *See IMS Tech.*, 206 F.3d at 1436; *see also Applied Med. Res.*, 448 F.3d at 1335.

Turning to the accused products, the parties do not dispute that each of the alleged equivalent fastener types perform the exact function claimed and achieve substantially the same result as found by the ALJ. ID at 64. The ALJ's finding that the F-connector male has a structure identical to that of the "fastener means" is also not challenged by any party. Thus, we adopt this finding. The only disputed issue is whether structures of the F-connector female, BNC connector, and RCA connector types are equivalent to the structure disclosed in the '257 patent.

Before the ALJ, no one disputed that the F-connector female, BNC connector, and RCA connector types were known prior to the '257 invention. *See e.g.*, Respondents' Joint Proposed Findings of Fact (July 30, 2009) at ¶ 248-53. Indeed, the testimony of PPC's technical expert, Dr. Eldering, and Gem's vice president, Mr. O'Neil, indicates that these types of connectors were generally well-known and were known to be interchangeable prior to the '257 invention.[6] Eldering Tr. at 1163:9-16, 1129:6-15, 1264:19-165:28; O'Neil Tr. at 1551:5-1553:3. Evidence of known interchangeability between the structure in the accused device and the disclosed structure is an important factor in deciding equivalence. *See Al-Site Corp. v. VSI Int'l, Inc.*, 174

[6] The testimony of Dr. Eldering and Mr. O'Neil is directed to a comparison between the F-connector male and the other three types of connectors (F-connector female, BNC connector, and RCA connector). We conclude, however, that the internally threaded cylindrical structure shown in the '257 patent is identical to the structure of the F-connector male and conclude that any testimony regarding the similarity between the F-connector male and the three other types of connectors at issue (F-connector female, BNC connector, and RCA connector) is applicable to the similarities between the structure of the "fastener means" and those three types of connectors.

F.3d 1308, 1315-17 (Fed. Cir. 1999). The broad scope of equivalents and the known interchangeability both suggest that at least some of these structures are equivalents.

We find that the difference between the external threading of the F-connector female and the internal threading of the structure in the '257 patent is insubstantial. Both structures are cylindrical. Moreover, they both attach the connector to a system component in substantially the same way by aligning the center conductor for receipt into the female connector and mechanically coupling complimentary threading through rotation. Eldering Tr. at 1254:9-1257:4. We therefore reverse the ALJ's finding that the F-connector female is not an equivalent to the structure of the "fastener means."

We find that the BNC connectors, male and female, are also equivalent to the structure corresponding to the claimed "fastener means" from the '257 patent. Unlike the corresponding structure of the "fastener means" which uses threading for the connection, the BNC connectors use complimentary slots and rails to effect the attachment. The rails on the outer surface of the female connector engage slots in the surface of the male connector. ID at 63; CPX-47 (Model Nos. 302-N2CSTP (Male), 302-2CSTP (Right Angle Male, and 351-2CSTP (Female)); Eldering Tr. at 1257:5-1261:14. Like the cylindrical threading in the '257 patent, the BNC connectors are cylindrical and align a center conductor for receipt into the female connector and require a rotational push to effect the mechanical engagement between the outer surface of the female connector and the inner surface of the male connector. *Id.* Thus, the structure of the BNC connectors performs the claimed function in substantially the same way as the structure disclosed in the '257 patent. We also find that the differences between the structure of the "fastener

means" and the BNC connectors are insubstantial in light of the similarities in their operation. This is especially true in light of the minimal importance of the structure of the "fastener means" to the '257 patent invention and the evidence that these connectors are interchangeable substitutes (discussed *supra*). We therefore reverse the ALJ's determination that the BNC connectors do not meet the "fastener means" limitation.

Additionally, we note that claim 1 does not specify the structure of the system component to which the claimed "fastener means" attaches. Because various types of connectors, *e.g.*, F-connectors and BNC connectors, were known and available at the time of invention, we find that one of ordinary skill in the art[7] would have understood that the structure of the "fastener means" depends on the type of connection used by the system component. *See Al-Site*, 174 F.3d at 1316 ("This . . . constitutes sufficient evidence . . . that persons of ordinary skill in the art consider glue an equivalent structure to those disclosed in the specification . . . ."). Thus, we find that the F-connector and BNC connector types (male, female, and right angle male) attach to a system component in substantially the same way (that is, a male connector with an internal coupling structure (e.g., internal threading or slots) is rotated onto a female connector with an external and complimentary coupling structure (e.g., external threading or rails) to maintain the attachment) to achieve the same result as the claimed "fastener means."

We agree with ALJ, however, that the RCA connectors are not equivalent to the

---

[7] The ALJ found that a person of ordinary skill in the art would have a bachelor of science degree in engineering and at least three years of experience in the cable and telecommunications industry relating to the design, manufacture, and utilization of coaxial cable connectors in communications systems. ID at 27. We adopt this finding.

corresponding structure of the "fastener means." Unlike the F-connector and BNC connector types and the structure disclosed in the '257 patent, the RCA connectors do not use mating complimentary structures, such as pins/slots or threading, for attachment. Eldering Tr. at 1261:15-1264:1. Nor do the RCA connectors require rotation to attach the mating connectors. Instead, the RCA connectors rely solely on friction between the outer surface of the female connector and the inner surface of the male connector to effect attachment. Eldering Tr. at 1262:1-15; CPX-47 (Model Nos. 100-2CSTP (Male), 101-2CSTP (Right Angle Male), and 125-2CSTP (Female)). Therefore, the mating RCA connectors can be attached solely by pushing them together in the axial direction. We find these differences between the RCA type of connection and the corresponding structure of the '257 patent to be substantial. We therefore affirm the ALJ's determination that the RCA connectors do not meet the "fastener means" limitation because they do not perform the claimed attachment function in substantially the same way as the claimed "fastener means."

2. "Engagement Means" in Claim 1 of the '257 Patent

a. Claim Construction

The term "engagement means" appears in the claimed limitation:

> engagement means circumscribing the interior of said outer collar and the exterior of said locking member, said engagement means coacting in circular interengagement to inseparably couple said locking member to said connector body at a first position and to accommodate limited axial movement of said locking member relative to said connector body between said first position and a second position . . .

'257 patent (JX-1), 6:4-24. The parties do not dispute that the claimed "engagement means" is a

means-plus-function limitation. Nor do they dispute that the function of the engagement means is to "to inseparably couple said locking member to said connector body at a first position and to accommodate limited axial movement of said locking member relative to said connector body between said first position and a second position," as the ALJ found. ID at 35. The parties do, however, dispute the meaning of the term "inseparably couple." In addition, they dispute whether the ALJ correctly identified the structure that corresponds to the "engagement means."

i. "Inseparably Couple"

The ALJ construed "inseparably couple" to mean that the "locking member does not separate or detach from the connector body prior to and during installation." ID at 48. The ALJ rejected a construction proposed by PPC and the IA that would give this term a meaning that only pertains to "normal and ordinary forces" that occur during shipping, handling, and installation. ID at 42-43. The ALJ found that various passages in the specification of the '257 patent indicate that the "inseparably couple" language is not restricted to "normal and ordinary forces." ID at 43 (citing '257 patent (JX-1), 1:37-43, 2:7-11). The ALJ also cited the applicant's amendment of "integrally couple" to "inseparably couple" during the prosecution of the '257 patent. ID at 48.[8]

---

[8] The ALJ also found that collateral estoppel applies to the construction of "inseparably couple" because of a prior claim construction set forth in a Summary Judgment Order in *John Mezzalingua Associates, Inc., d/b/a PPC v. Thomas & Betts Corporation*, Case No. 01-CV-6752 in the Southern District of Florida. ID at 38-41 (citing *Pfaff v. Wells Electronics, Inc.*, 5 F.3d 514, 518 (Fed. Cir. 1993)). The ALJ did not specify whether collateral estoppel applies against all parties in the investigation, including the IA, or just PPC. In the district court's Summary Judgment Order, the judge construed "inseparably coupled" to mean "that the locking member is not completely removed or separated from the connector body prior to and during installation," and found that the accused product does not infringe because its locking member is detachable from the connector body prior to and during installation. *See* Summary Judgment Order at 17.

We agree with the ALJ's construction of "inseparably couple" to mean that "the locking member does not separate or detach from the connector body prior to and during installation" because it is consistent with the ordinary meaning of the claim language, the specification including the discussion of the prior art, and the prosecution history. The language of the claim does not require the qualifying language, "normal and ordinary forces." The '257 specification states that: "an objective of the present invention is the provision of an improved radial compression type end connector wherein the outer sleeve component remains *at all times integrally connected to the inner post, both prior to and during installation*." '257 patent (JX-1), 2:7-12 (emphasis added). The ALJ correctly concluded that this general characterization of the "present invention" does not support the inclusion of language limiting "inseparably" to normal and ordinary forces.

The IA argues that ALJ's construction is incorrect, relying on a passage in the specification at column 5, lines 37-43:

> In all cases, the coaction of shoulder 50a with groove 52 serves to retain the connector body and locking member in an assembled state during storage, handling, and installation on a cable end. This eliminates any danger of the locking member being dropped or otherwise mishandled during the assembly.

'257 patent (JX-1), 5:37-43. We find that this passage actually contradicts the IA's position by indicating that coupling is maintained "in all cases." We agree with the ALJ that the language "in all cases" and "at all times" ('257 patent (JX-1), 2:10) is inconsistent with the IA's view that

---

This order was affirmed, *per curiam*, by the Federal Circuit in *John Mezzalingua Associates, Inc.v. Thomas & Betts Corp.*, 54 Fed. Appx. 697, 2003 WL 136095 (Fed. Cir. 2003) (unpubl.).

the construction should be limited to normal and ordinary forces. In fact, the '257 specification does not suggest that it is even possible for the locking member 26 to be disengaged from the connector body 22.

The IA argues that the discussion of the problems associated with the prior art in the '257 patent suggests that the solution is to prevent disengagement of the locking member from the connector body during normal handling. The discussion of the prior art, however, does not suggest the types of forces under which coupling should be maintained. At most, the discussion of the prior art indicates that the problems of misplacing, losing, dropping, or mishandling components can be overcome by maintaining coupling prior to and during installation. *See* '257 patent (JX-1), 1:10-2:21. We find this description of the prior art to be wholly consistent with the ALJ's construction of "inseparably couple."

We agree with the ALJ that the prosecution history also supports his construction. During prosecution, the applicant for the '257 patent amended the claim language "integrally couple" to "inseparably couple" in response to a prior art rejection issued by the United States Patent and Trademark Office ("USPTO") based on U.S. Patent No. 4,408,822 to Nikitas ("the Nikitas patent"). '257 prosecution history (JX-2) at 108, 136. In distinguishing the amended claim, the applicant explained that the Nikitas patent is plagued by the difficulties associated with detachable nut members which are frequently dropped and sometimes lost during assembly procedures and that the '257 "invention solves this problem by <u>inseparably</u> coupling tubular locking member 26 to the outer collar 30 of the connector body." *Id.* at 129 (emphasis in original). Based upon this prosecution history, the ALJ was correct that the word "inseparably"

requires "something more than" the word "integrally" and that this amendment emphasized that the claimed invention is a one-piece unit. ID at 48.

Finally, we note that the construction set forth by the ALJ is consistent with the construction set forth in a Summary Judgment Order in *John Mezzalingua Associates, Inc., d/b/a PPC v. Thomas & Betts Corporation*, Case No. 01-CV-6752, in the Southern District of Florida, which the Federal Circuit affirmed *per curiam* without an opinion. *John Mezzalingua Assocs. v. Thomas & Betts Corp.*, 54 Fed. Appx. 697 (Fed. Cir. 2003). We find no reason to deviate from this claim construction.

ii. Structure of "Engagement Means"

The ALJ found that the structure corresponding to the "engagement means" is "a first radially protruding circular shoulder (50a) having a generally perpendicular rear face and an inclined ramp-like front face [that] circumscribes the exterior locking member (26) and coacts in circular interengagement with an internal groove (52) circumscribing the interior of the outer collar (30)." ID at 37-38. In reaching this conclusion, the ALJ found that the inclined face 54 of the first shoulder 50a, shown in the figure below, accommodates movement of the locking member 26 relative to the connector body 22, and the generally perpendicular face 56 resists movement, citing the '257 patent (JX-1) at 4:22-25, 5:52-54. ID at 37.

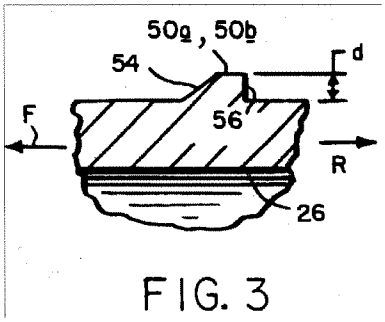

FIG. 3

Addressing a construction proposed by the active respondents, the ALJ found that snap engagement is not necessary to "inseparably couple" or to "accommodate limited axial movement." *Id.* The Commission determined to review the ALJ's identification of the corresponding structure.

The engagement means (*i.e.*, 50a, 50b, and 52) is shown in the following portion of Figure 2, which shows the locking member 26 disengaged from the connector body 22, and Figure 4, which shows the locking member 26 engaged with the connector body 22:

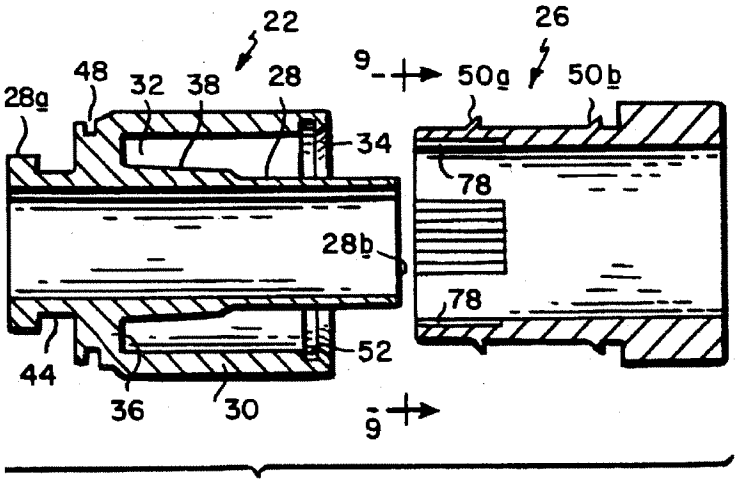

FIG. 2 , 26

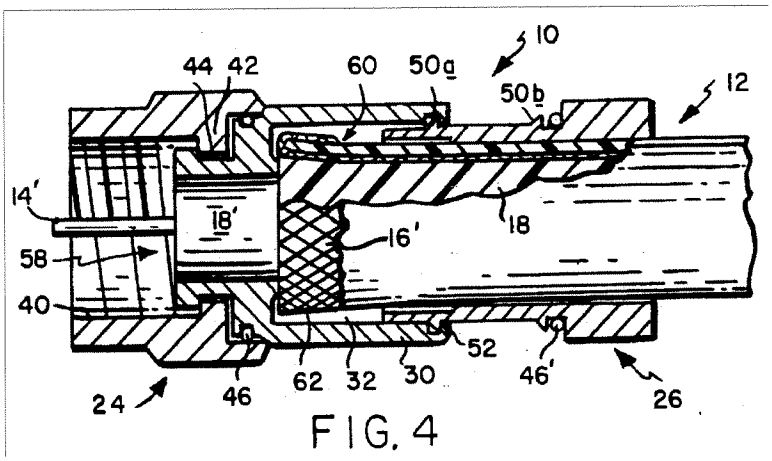

FIG. 4

The specification explains that:

> Engagement means serve to integrally couple the locking member 26 to the connector body 22 for limited axial movement . . . between a first "open" position . . . and a second "clamped" position . . . . [and] preferably comprises first and second radially protruding circular shoulders 50a, 50b on the locking member 26, each shoulder being configured and dimensioned to coact in snap engagement with an internal groove 52 . . .

'257 patent (JX-1), 4:12-31. The claimed function of the "engagement means," as correctly identified by the ALJ, is "to inseparably couple said locking member to said connector body at a first position and to accommodate limited axial movement of said locking member relative to said connector body between said first position and a second position." ID at 35.

We agree with the ALJ that the corresponding structure must include the shape of the first shoulder 50a as having a generally perpendicular rear face 56 and an inclined ramp-like front face 54, as shown in Figure 3 below, because the '257 specification clearly associates these shapes with the claimed functions.

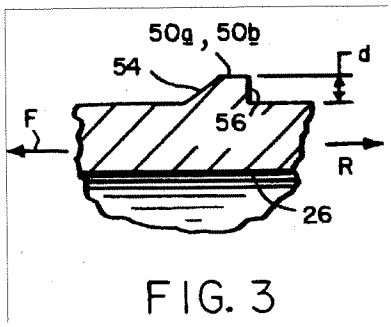

FIG. 3

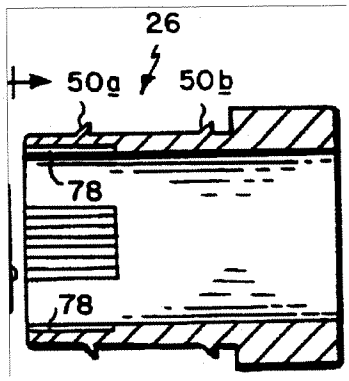

For example, the '257 specification states that the "front faces 54 ***accommodate*** movement of the shoulders out of the groove 52 . . . whereas the rear faces 56 resist movement of the shoulders out of the groove 52 in a rearward axial direction." '257 patent (JX-1), 4:30-31. The forward axial direction (F) and the rearward axial direction (R) are shown above in Figure 3.[9] We find that the perpendicular face 56 of the shoulder 50a also inseparably couples the locking member 26 to the connector body 22 in the first "open" position (Figure 4), and the ramp-like inclined face 54 of the shoulder 50a accommodates axial movement of the locking member 26 relative to the connector body 22 in the forward direction (F) when in the first "open" position (Figure 4).

We are not persuaded by PPC's argument that the function of the inclined ramp-like front face 54 is solely to allow movement of shoulder 50a out of the groove 52, but not to "accommodate . . . axial movement," as claimed. These two functions undoubtedly overlap, and the inclined ramp-like front face 54 performs them both. In other words, by allowing movement

[9] The forward axial direction (F) points toward the end of the connector 10 that attaches to the system component, whereas the rearward axial direction (R) points toward the end that receives the cable 12.

of the first shoulder 50a out of the groove 52, the inclined ramp-like face 54 *is accommodating axial movement* of the locking member 26. Therefore, the ALJ's identification of the inclined ramp-like front face 54 as part of the corresponding structure for the engagement means is correct.

However, the ALJ's identification of corresponding structure is incomplete because it omits the second shoulder 50b. The ALJ's construction correctly identifies the perpendicular rear face 56 of the first shoulder 50a for performing the "inseparably coupl[ing]" function and the ramp-like inclined surface 54 of the first shoulder 50a for performing the "accommodating . . . axial movement between the first position and a second position." But the ALJ's construction does not identify any structure that limits the "axial movement," as required by the claim language, which recites "accommodate ***limited*** axial movement . . . between said first position and a second position."

Figures 4 and 5 below show the claimed "first position" and "second position" of the locking member 26, respectively:

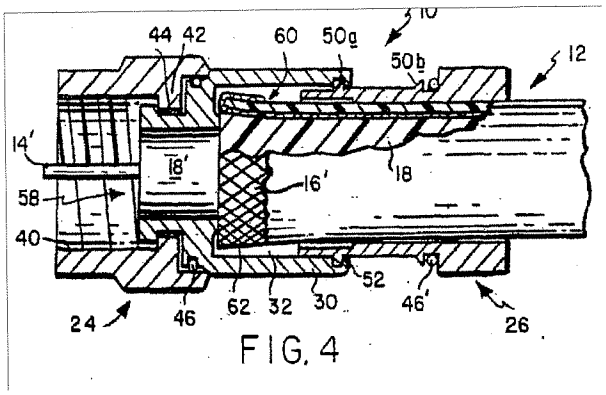

FIG. 4

FIRST POSITION

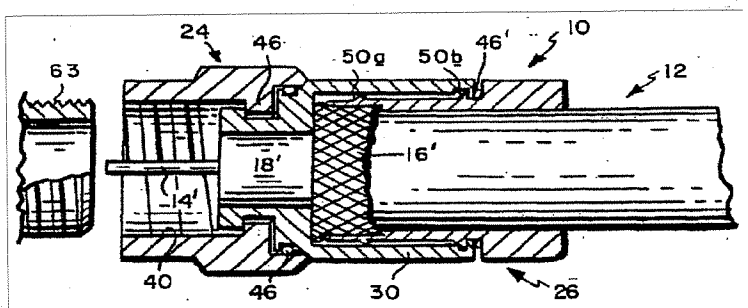

FIG. 5

SECOND POSITION

The first shoulder 50a inseparably couples the locking member 26 and, by implication, does not allow for movement rearward (R) axial movement, *i.e.*, to the right in Figure 4. The '257 patent describes axial movement in the forward direction (F), *i.e.*, between first open position (Figure 4) and second clamped position (Figure 5). In our view, without the second shoulder 50b, the locking member 26 would be able to move in the forward axial direction (F) relative to the connector body 22 beyond the second position, until it contacts the end of the outer collar 30. *See* '257 patent (JX-1), Figure 5. In other words, without the second shoulder 50b, the structure would not "accommodate limited axial movement of said locking member relative to said connector body between said first position and a second connector body."

We conclude that the second shoulder 50b is the structure that limits forward axial movement to the second position. Indeed, the second shoulder 50b is the only structure set forth in the '257 specification that does not render the claim term "limited" superfluous. *Merck & Co., Inc. v. Teva Pharms. USA, Inc.*, 395 F.3d 1364, 1372 (Fed. Cir. 2005) ("A claim construction that gives meaning to all the terms of the claim is preferred over one that does not do so.").

Moreover, the second shoulder 50b is associated with limiting axial movement of the locking member in the forward direction (F) in a number of passages:

- "Final locking in the clamped position occurs when the shoulder 50b coacts in snapped engagement with the groove 52." '257 patent (JX-1), 4:59-62.
- "The shoulder 50b coacts with groove 52 to retain the locking member in its final clamped position." *Id.* at 5:43-44.

We find that the "clamped position" is the second position of claim 1. Based on the description in the '257 specification as accompanied by the figures, we conclude that without the second shoulder 50b, axial movement of the locking member 26 in the forward direction (F) would not be "limited." In fact, the specification describes the second "clamped" position by reference to "when the [second] shoulder 50b coacts in snapped engagement with the groove 52." '257 patent (JX-1), 4:59-62. Thus, without the second shoulder 50b, the claimed connector would not have a "second position."

We further conclude that the shape of the second shoulder 50b is not a required part of the corresponding structure. The second shoulder 50b does not engage the groove 52 until the locking member 26 is moved axially to the second "closed" position, at which point, the second shoulder 50b must only limit axial movement in the forward direction (F). Thus, we find that the only structural requirement of the second shoulder 50b is that it be a radially protruding circular shoulder on the locking member 26 spaced apart from the first shoulder 50a and be configured and dimensioned to coact in circular interengagement with an internal groove 52 circumscribing the interior of the outer collar 30.

Finally, we do not agree with the IA that inclusion of the second shoulder 50b effectively

imports a limitation from dependent claim 4. Claim 4 states that the "engagement means additionally coacts to fix said locking member at said second position." The functional language of claim 4 incorporates additional structural limitations for the second shoulder 50b. While the "engagement means" of claim 1 requires the second shoulder 50b to *limit* axial movement, which can be done by a variety of shapes, the "engagement means" of claim 4 requires the locking member to be *fixed* at the second position, which is done by the disclosed perpendicular face 56 of the second shoulder 50b. *See* '257 patent (JX-1), 4:28-30 ("[T]he rear faces 56 resist movement of the shoulders out of the groove 52 in a rearward axial direction (arrow "R" in FIG. 3)" (emphasis added)). Thus, the difference between claims 1 and 4 is that claim 1 requires the second shoulder 50b to stop or limit the movement of the locking member 26 in the forward axial direction (F), but claim 4 additionally requires the second shoulder 50b to prevent the locking member 26 from moving in the rearward axial direction (R) back toward the first open position.

For the reasons set forth above, we modify the ALJ's determination relating to the corresponding structure of the "engagement means" and conclude that it is: a first and second axially spaced, radially protruding, circular shoulders 50a and 50b circumscribing the exterior of the locking member 26, each shoulder being configured and dimensioned to coact in circular interengagement with an internal groove circumscribing the interior of the outer collar 30, and where the first radially protruding circular shoulder has a generally perpendicular rear face and an inclined ramp-like front face.

b. Infringement by the Active Respondents

The ALJ found that the accused Fu-Ching/Gem connectors do not meet the "engagement

means" element. First, the ALJ found that the accused connectors have a different structure than what is required because the accused connectors do not have a "circular shoulder" that protrudes from the exterior or surface of the locking member with a "generally perpendicular face and an inclined ramp-like front face." ID at 68-69. In addition, the ALJ also found that the accused connectors do not perform the claimed functions of (1) "inseparably coupl[ing]" the locking member to the connector body and (2) "accommodat[ing] limited axial movement of said locking member relative to said connector body between said first position and a second position." ID at 76.

As to the first function, the ALJ found that the locking member of the accused connectors can be, and is, separated from the connector body under certain circumstances. ID at 73. The ID states that the accused connectors separate "inadvertently and occasionally under normal and ordinary forces during shipping and storage, and during installation . . ." *Id.* The ALJ also found that there is a lack of evidence that the accused connectors perform the claimed function "accommodat[ing] limited axial movement." ID at 75-76 (citing Oswald, Tr. at 956-58, 979; Eldering, Tr. at 1089-1102). The Commission determined to review to consider *inter alia* whether "the normal intended use of the accused connectors of the active respondents involve separation of the locking member from the connector body" and whether this affects the infringement. Commission Review Notice (Dec. 14, 2009).

Upon review, we find the ALJ properly applied the correct construction of "inseperably couple" to the connectors of the active respondents. Although the normal intended use of the accused connectors does not typically involve separation of the locking member from the

connector body, we conclude that the locking member is nevertheless *separably* coupled to the connector body. We reject the arguments made by PPC and the IA because they read the term "inseparably" out of the claim. They argue that because separation is not reported in 99% of the accused connectors, the accused connectors meet the "inseparably couple" limitation 99% of the time. The fact that these accused connectors remain coupled, however, does not mean that they are "inseparably" coupled. On the contrary, the reported 1% of the accused connectors that separate under normal circumstances tends to show that, even if 99% of the accused connectors remain coupled, they are not "inseparably" coupled. The problem with the argument made by PPC and the IA is that it replaces a determination of whether the locking member is "inseparably couple[d]" to the connector body with a determination whether the connector is reported separated, *i.e.*, whether it is coupled at all. This view renders the term "inseparably" superfluous.

The ALJ properly relied on the testimony of Gem's vice president, William O'Neil, and Fu Ching's vice president, Jessie Hsia, that the locking members of the accused connectors are separable from the connector body. *See* O'Neil Tr. at 1508-18, 1522; Hsia Tr. at 1357-59. Mr. O'Neil and Ms. Hsia both testified that these accused connectors can be manually separated and that these connectors separate by themselves during normal conditions, *e.g.*, during shipping or installation, and that these locking members can be simply "popped" back on the connector bodies. O'Neil Tr. at 1508-10; Hsia Tr. at 1357-59. We find the ALJ's conclusion to be consistent with *Hilgraeve Corp. v. Symantec Corp.*, 265 F.3d 1336 (Fed. Cir. 2001), which requires that infringement be determined under normal operating conditions. Accordingly, we affirm the ALJ's conclusion and adopt all of the ALJ's findings on this issue.

We further affirm the ALJ's findings that the accused connectors of the active respondents do not meet the "accommodating limited axial movement" language of the claim and do not have a structure identical or equivalent to the corresponding structure of the '257 patent for the reasons set forth in the ID. More specifically, these connectors lack the structure of 50a, *i.e.*, (1) the protruding shoulder, (2) its generally perpendicular rear face, and (3) its inclined ramp-like face. Oswald, Tr. at 949, 955-56, 958-959, 976-81,1003-05, 1013-14; CDX 37; CDX-38. Moreover, we agree with the ALJ that the accused products do not have an equivalent structure because the differences are substantial.[10]

Regarding the addition of the second shoulder 50b to the construction of "engagement means," the accused connectors also lack this structure or its equivalent for the same reasons that they lack the structure for the first shoulder 50a. That is, the outer surface of the structure of the accused connectors is entirely smooth without any protruding shoulders. ID 66-70; CDX-37; CDX-38. Thus, for this additional reason, we find no infringement by the active respondents.

c. Infringement of the '257 Patent by Defaulting Respondents

PPC argues that the defaulting respondents accused connectors (FY-039 and FY-040B) have a second shoulder, so the ALJ's findings that they infringe would not be affected by

---

[10] We conclude that the ALJ's findings of non-infringement are sustainable under any of the constructions of "engagement means," including PPC's. Because the accused products do not perform the claimed function, *i.e.*, they are not "inseparably" coupled and do not "accommodate limited axial movement," these products do not infringe. Moreover, even under PPC's identification of corresponding structure (*e.g.*, PPC Pet. at 14), the accused products do not infringe because they lack the protruding circular shoulder 50a with the generally perpendicular rear face 56 and do not have an equivalent. ID 66-70; CDX-37; CDX-38; Oswald Tr. at 955-59, 976-77, 1002-05, 1014.

inclusion of the second shoulder 50b. PPC Br. at 38 (citing CDX-29; CPX-33, CPX-34; CPX35; CPX-36; CX-228; CX-229; CX-230; CX-231). We agree with PPC that the FY-039 and FY-040B accused connectors have a structure identical to the second shoulder 50b, and therefore infringe. CDX-29; CPX-33, CPX-34; CPX35; CPX-36; CX-228; CX-229; CX-230; CX-231. Moreover, the ALJ found that substantial, reliable, and probative evidence indicates that all other claim elements are met by the accused connectors of the defaulting respondents. ID at 77-80. We therefore find that substantial, reliable, and probative evidence exists in the record to find infringement, even with the modified construction of "engagement means."

3. Validity of the Asserted Claims of the '257 Patent

We agree with the ALJ that the active respondents failed to prove the asserted claims of the '257 patent invalid. The patent examiner's reasons for allowance indicate that none of the prior art references teach "a connector for connecting a coaxial cable to a system component as claimed, particularly having engaging means circumscribing the interior of the outer collar and the exterior of the locking member, the engaging means coacting in circular interengagement." '257 prosecution history (JX-2) at 138. We agree with the USPTO that these references do not teach the claimed "engagement means," and we agree with the ALJ, the IA, and PPC that the active respondents have not proven otherwise.

The prior art Nikitas patent's threaded collar 44 shown in Figures 1 through 5 does not meet the inseparably coupled "locking member" limitation. *See* '257 prosecution history (JX-2) at 102 (Figure 1 showing collar 44 separated from connector body *during installation*). Indeed, the Nikitas patent suggests that the threaded collar 44 is designed for frequent disconnection and

reconnection. *Id.* at 102 (column 1, lines 13-17). Because re-connection of the cable 12 is achieved, in part, by the connection of the collar 44 to the connector body, the collar 44 must not be "inseparably coupled." The Nikitas patent also fails to teach the corresponding structure of the "engagement means." *See Id.* at 102-03. Contrary to the structure of the '257 invention, the Nikitas patent uses the threading on the collar 44 to effect the engagement with the connector body, which is quite different from the asserted clams of the '257 invention. The Nikitas patent does not teach (1) a first radially protruding circular shoulder (2) having a generally perpendicular rear face (3) and an inclined ramp-like front face (4) that coacts in circular interengagement with an internal groove circumscribing the interior of the outer collar, and (5) a second radially protruding circular shoulder as required by claim 1. Neither U.S. Patent No. 4,614,390 (Baker) nor U.S. Patent No. 4,834,675 (Samchisen), teach this feature lacking from the Nikitas patent. Accordingly, we affirm the ALJ's finding that the active respondents failed to prove invalidity of the asserted claims of the '257 patent.

4. Domestic Industry for the '257 Patent

In order to prove a violation of section 337 in a patent-based action, a complainant must demonstrate that a domestic industry exists or is in the process of being established. 19 U.S.C. § 1337(a)(2). *See Certain Microsphere Adhesives, Process For Making Same, And Prods. Containing Same, Including Self-Stick Repositionable Notes*, Inv. No. 337-TA-366, USITC Pub. 2949, Comm'n. Op. at 8 (Jan. 1996). The domestic industry requirement is set forth in its entirety in sections 337(a)(2) and (3):

> (2) Subparagraphs (B), (C), (D), and (E) of paragraph (1) apply only if an industry in the United States, with respect to the articles protected by the patent, copyright, trademark, maskwork, or design concerned, exists or is in the process of being established.
>
> (3) [A]n industry in the United States shall be considered to exist if there is in the United States, with respect to articles protected by the patent . . . concerned –
>
> (A) significant investment in plant and equipment;
>
> (B) significant employment of labor or capital; or
>
> (C) substantial investment in its exploitation, including engineering, research and development, or licensing.

19 U.S.C. § 1337(a)(2) and (3). The Commission has divided the domestic industry requirement into an economic prong (which requires certain activities) and a technical prong (which requires that these activities relate to the intellectual property being protected). 19 U.S.C. §1337(a)(2) and (a)(3); *see, e.g., Certain Variable Speed Wind Turbines and Components Thereof*, Inv. No. 337-TA-376, USITC Pub. 3003, Comm'n Op. at 14-17 (Nov. 1996).

In light of our modified claim construction for the term "engagement means," we consider whether complainant PPC's product meets the technical prong of the domestic industry requirement for the '257 patent. As set forth above, the correct structure for the "engagement means" is: a first and second axially spaced, radially protruding, circular shoulders 50a and 50b circumscribing the exterior of the locking member 26, each shoulder being configured and dimensioned to coact in circular interengagement with an internal groove circumscribing the interior of the outer collar 30, and where the first radially protruding circular shoulder has a generally perpendicular rear face and an inclined ramp-like front face. In its notice of review, the

Commission asked the parties: "[i]f the second shoulder 50b is part of the corresponding structure [of the 'engagement means'], how does this affect the ALJ's finding[] on the issue[] of . . . domestic industry . . . ?" PPC argues that "additional evidence [would be required] to support the ALJ's finding on domestic industry." PPC Br. at 38. PPC admits that its CMP connector does not have a structure identical to the second shoulder 50b, but that it would prove the CMP connector has an equivalent structure. *Id.* Initially, the active respondents acknowledged that PPC's domestic industry product, *i.e.*, the CMP connector, includes the second shoulder 50b. Resp. Br. at 64. More recently, however, the active respondents stated that they were "mistaken" and that the CMP connector "has a smooth surface where the second shoulder should be." Resp. Rep. Br. at 19 (citing CX-226).

As an initial matter, we note that the Commission gave PPC ample notice that we were considering whether to add the second shoulder 50b to the corresponding structure of the "engagement means" and specifically asked PPC to address domestic industry under this modified claim construction. Besides the mere allegation that PPC would prove that its connector has an equivalent structure, PPC failed to put forth any argument or evidence regarding what the alleged equivalent is and failed to explain what evidence or testimony it would provide if the record were reopened. PPC's generalized assertion is insufficient to warrant remand.

Further, we find sufficient evidence in the record to conclude that the PPC's CMP connector does not have a structural equivalent of the second shoulder 50b. CX-12; CX-226; CPX-45; CPX-31; CX-211. Complainant PPC's CMP connector has a first shoulder that is axially spaced apart from a stop that engages the end of the connector body when the cable is

attached. *Id.*; CPX-97. Both the first shoulder and the end stop protrude radially from the outer surface of the locking member. CX-226. There are several ridges formed in the surface of the locking member between the first shoulder and the end stop. *Id.* The purpose of these ridges is to "eliminate moisture leakage that can cause failures." CX-12 at 15. When the locking member of the CMP is moved to the second closed position, the first shoulder is moved out of the groove in the connector body and the ridges are moved axially into the connector body beyond the groove. CPX 97; CX-211; CX-226. The ridges do not engage the groove when the locking member is in the second position. Nor does the end stop engage the groove or coact in circular engagement. The end stop contacts the end of the connector body. The groove in the connector body is not engaged by any structure on the locking member when in the second position. *Id.*

Moreover, as the active respondents point out in their recent submission, the evidence cited by PPC "demonstrates that the surface of the CMP locking member at the second shoulder location is entirely smooth." Resp. Rep. Br. at 19. We agree that there is an absence of structure on the exterior of the locking member where the groove is located when the locking member is in the second position and thus there is no "circular interengagement," as required by the claim language. Because (1) the groove on the connector body is not engaged by any structure of the locking member when in the second position and (2) the locking member is entirely smooth where the claim requires a second protruding shoulder, we find that there is no structure to consider as an equivalent to the second shoulder 50b of the '257 patent. In other words, the CMP connector does not contain a structure identical or equivalent to the '257 patent's "engagement means." We therefore reverse the ALJ's finding that PPC meets the domestic industry

requirement for the '257 patent. Because PPC does not meet the domestic industry requirement, we find no violation of section 337 with respect to the '257 patent by any of the respondents.

B. <u>The '539 Patent: Domestic Industry</u>

We also examine whether PPC has satisfied the domestic industry requirement with respect to the '539 design patent. As noted above, the statute includes technical and economic prongs. The evidence and argument PPC presented on the economic prong raise an important issue of statutory interpretation, as explained below.

The ALJ found that complainant PPC meets the technical prong of the domestic industry requirement for the '539 design patent, because PPC's licensee, [[

]] makes a product called the [[ ]] that practices the '539 design patent. ID/RD at 109-10. The ALJ also found that PPC receives royalties from [[ ]] connector sales pursuant to its license agreement with [[ ]]. ID/RD at 110 (citing Malak, Tr. at 185:20-186:1, 190:1-192:13). No party petitioned for review of these findings.

The ALJ also found that complainant PPC satisfied the economic prong of the domestic industry requirement. ID/RD at 114. In reaching this conclusion, the ALJ found that the "evidence shows PPC has made a substantial investment in enforcement of the '539 design patent, as well as some investment in research and development and licensing." ID/RD at 113. Specifically, he relied on evidence relating to PPC's [[ ]] in litigation expenses directed to enforcing the '539 design patent against [[

]].

ID/RD at 112-13. The ALJ also "inferred that at least some portion of Mr. Noah Montena's [the

inventor of the '539 design patent] salary, plus his time, effort and use of PPC's equipment and facilities, is attributable to his development of the design that became the '539 [design] patent." *Id.* (citing Montena, Tr. at 395, 400).

The IA petitioned for review of the ALJ's findings with respect to the economic prong. No other party sought review, because the '539 design patent was only asserted against defaulting respondents. The IA argued that the only activity related to the '539 design patent is PPC's litigation with [[ ]] and that this is insufficient to meet the economic prong of the domestic industry requirement. Recognizing the importance of the issue, the Commission determined to review and asked both the parties and the public to address a series of questions bearing on the domestic industry requirement and the meaning of the statute.[11]

To establish the economic prong of the domestic industry requirement, PPC relies predominantly on its litigation with [[ ]]. PPC admits that it did not present evidence that it produces connectors that satisfy the technical prong for the '539 design patent. PPC Br. at 47. PPC further admits that it does not rely on its investment in plant and equipment or its employment of labor or capital to satisfy the economic prong for the '539 design patent. *Id.* Moreover, PPC admits that it did not present any evidence relating to its licensee [[ ]] investment in plant and equipment or employment of labor or capital in the United States with respect to the licensed [[ ]] connector. *Id.* Instead, PPC relies solely on its own activities to satisfy the economic prong, arguing that the expenses

[11] As noted above, the Commission received responses from the parties and the public, representing a number of viewpoints and proposing a range of approaches to the issue.

associated with the [[ ]] litigation constitute a substantial investment in the exploitation of the '539 design patent through licensing under section 337(a)(3)(C).

PPC sued [[ ]] for patent infringement [[ ]]. [[ ]], after the parties conducted discovery and a full trial, the jury returned a verdict for PPC that [[ ]] infringed the '539 design patent and that the patent was not invalid. Judgment was entered and damages in the amount of $1,350,000 were awarded, and, [[ ]], a permanent injunction was entered against [[ ]]. *See* Complaint, Appendix I. According to testimony presented by PPC, it spent [[ ]] in litigation expenses directed to enforcing the '539 design patent against [[ ]]. ID/RD at 112-13.

1. Licensing Activities Under Section 337(a)(3)(C)[12]

PPC's licensing argument raises the question of whether litigation activities can constitute "exploitation" under section 337(a)(3)(C). We conclude that patent infringement litigation activities alone, *i.e.*, patent infringement litigation activities that are not related to

[12] Commissioners Okun finds that the plain language of the statute contemplates that "exploitation" could include activities beyond engineering, research and development, and licensing. However, the facts of this case only present the issue of whether PPC's litigation activities are related to licensing, and therefore she declines to place limits on what might constitute "substantial investment in [the] exploitation" of a patent under other factual scenarios.

engineering, research and development, or licensing, do not satisfy the requirements of section 337(a)(3)(C). However, litigation activities (including patent infringement lawsuits) may satisfy these requirements if a complainant can prove that these activities are related to licensing and pertain to the patent at issue, and can document the associated costs.[13] The same holds true for other types of activities that are allegedly related to licensing.

Our discussion begins with the text of section 337 because ultimately the Commission is a creature of statute and may not venture beyond its statutory authority. *VastFame Camera, Ltd. v. Int'l Trade Comm'n*, 386 F.3d 1108, 1112 (Fed. Cir. 2004); *Farrel Corp. v. U.S. Int'l Trade Comm'n*, 949 F.2d 1147, 1151-53 (Fed. Cir. 1991), *superceded by statute*, 19 U.S.C. § 1337(c); *Hughes Aircraft Co. v. Jacobson*, 525 U.S. 432, 438 (1999). Section 337(a)(3)(C) states that "an industry in the United States shall be considered to exist if there is in the United States . . . substantial investment in . . . exploitation [of the patent], including engineering, research and development, or licensing." Notably, the provision does not specifically mention litigation. Nor does the text define the term "exploitation."

Although Congress did not define the term "exploitation," the design of the statute provides substantial guidance in determining what constitutes "exploitation" under section 337(a)(3)(C). *See K Mart Corp. v. Cartier, Inc.*, 486 U.S. 281, 291 (1988) ("In ascertaining the plain meaning of the statute, the court must look to the particular statutory language at issue, as

[13] We do not address litigation activities related to engineering or research and development.

well as the language and design of the statute as a whole."). Congress specifically identified three types of activities in section 337(a)(3)(C) - engineering, research and development, and licensing - that constitute exploitation. Patent infringement litigation was not among them. We understand that by using the term "including" and the conjunction "or" in section 337(a)(3)(C), Congress indicated that engineering, research and development, and licensing are examples of exploitation and they do not form an exhaustive list of what can constitute "exploitation." Nevertheless, we decline at this time to venture beyond these three examples because we are not convinced that patent infringement litigation activities unrelated to engineering, research and development, or licensing constitute "exploitation" for purposes of the statute. We find support in the fact that, in listing these three examples of "exploitation," Congress could have easily included patent infringement litigation, but did not.

Furthermore, a determination that patent infringement litigation activities taken alone constitute "exploitation" would render the domestic industry requirement a nullity. *See Dodd v. U.S.*, 545 U.S. 353, 371 (2005) ("It is, of course, a basic canon of statutory construction that we will not interpret a congressional statute in such a manner as to effectively nullify an entire section. . . . [or] allowing [it] to have virtually no real world application."). Congress clearly stated that it did not intend mere patent ownership to constitute a domestic industry:

> The mere ownership of a patent or other form of intellectual property rights would not be sufficient to satisfy this test. The owner of the property right must be actively engaged in steps leading to the exploitation of the intellectual property, including application engineering, design work, or other such activities.

S. Rep. No. 100-71 at 130. Filing a patent infringement lawsuit is no more than a small step beyond mere ownership. Any patent owner can file a patent infringement action in the district courts of the United States under 35 U.S.C. § 271. Allowing patent infringement litigation activities alone to constitute a domestic industry would place the bar for establishing a domestic industry so low as to effectively render it meaningless. Congress nowhere indicated that it intended that result. Thus, we conclude that patent infringement litigation activities alone do not constitute "exploitation" under section 337(a)(3)(C).

On the other hand, licensing is an activity that is clearly within the realm of "exploitation" as contemplated by section 337(a)(3)(C). Thus, the question before the Commission is whether litigation activities that are related to licensing may be considered exploitation. As noted, the Commission sought comments on the issue not only from the parties but also from members of the public. Several of the submissions we received were at sharp variance with one another. On the one hand, some suggested that litigation activities can never constitute exploitation of an intellectual property right no matter how closely linked to licensing. In contrast, others asserted that litigation activities, regardless of whether they are connected with licensing, should always be considered by the Commission in determining the existence of a domestic industry. Based on our analysis, we cannot embrace either of the opposing views.

Turning to the design of section 337(a)(3)(C) as a whole, the first two statutory examples of "exploitation" are "engineering" and "research and development." The terms "engineering" and "research and development" may inform the interpretation of "licensing" because they are all placed together in the same list. *See United States v. Williams*, 128 S. Ct. 1830, 1839 (2008)

("[T]he common sense canon of *noscitur a sociis* . . . counsels that a word is given more precise content by the neighboring words with which it is associated."). Thus, we understand the word "licensing" in section 337(a)(3)(C) to suggest the "exploitation" of a patent in a manner similar to "engineering" and "research and development." Investments in engineering as well as in research and development represent efforts to facilitate and/or hasten the practical application of the invention by, for example, bringing it to market. This suggests that Congress intended for the Commission to consider at least licensing activities related to the practical application of the invention.

The legislative history also provides guidance as to the type of licensing activities that Congress contemplated would satisfy section 337(a)(3)(C) when the provision was incorporated. For instance, Congress contemplated that the domestic industry requirement would cover entities such as "universities and other intellectual property owners who engage in extensive licensing of their [patent] rights to *manufacturers*." H. Rep. 100-40 at 157; S. Rep. No. 100-71 at 129 (emphasis added). Further, Congress contemplated that the requirement would cover small companies, such as biotech startups, that license their patents in order to generate sufficient capital to manufacture a product in the future:

> For those who make substantial investments in research, there should be a remedy. For those who make substantial investments in the creation of intellectual property and then license creations, there should be a remedy. Let me give one example, there's a start-up biotech firm in my state. Its product is its patents. *It hasn't reached the stage of manufacture. It doesn't have the money. But it will reach that point, by licensing its patents to others.* Should we deny that firm the right to exclude the work of pirates? Our legislation would say no. A party could get relief if it has made significant investment in R & D, engineering, or licensing.

132 Cong. R. H1782 (Apr. 10, 1986) (emphasis added).

In addition, we note that the licensing provision was added to the domestic industry requirement in 1988 in order to overturn the Commission's *Gremlins* decision. *Certain Products with Gremlin Character Descriptions*, Inv. No. 337-TA-201, Comm'n. Op. (1986) ("*Gremlins*"); 132 Cong. R. H1782 (Apr. 10, 1986). In the *Gremlins* case, Warner Brothers Inc. Licensing Company of America ("Warner Brothers") was engaged in extensive market research, sales, sales promotion, graphics services, financial control, quality control, and strategy in connection with licensing its copyrights; the company alleged injury to its business promoting merchandise bearing registered Gremlins copyrights. Although a domestic industry existed based on domestic manufacture by Warner Brothers' licensees, the Commission found that Warner Brothers itself could not meet the then-existing injury requirement.[14] *Id.* at 12. The Commission also reversed part of the ALJ's final ID that Warner Brothers' licensing division constituted a domestic industry because, at that time, licensing could not form the basis of a domestic industry. *Id.* at 9-11. Shortly after the *Gremlins* investigation, Representative Kastenmeier called for an amendment to section 337 to "avoid unfortunate results which have occurred in some recent cases, such as Gremlins." 132 Cong. R. H1782 (Apr. 10, 1986).

---

[14] Prior to the 1988 amendments to section 337(a), a complainant was required to show that there was an unfair act "the effect or tendency of which is to destroy or substantially injure an industry, efficiently and economically operated, in the United States, or to prevent the establishment of such an industry . . . ."

The examples mentioned in the legislative history – the university and start-up company licensing their inventions to manufacturers, and the *Gremlins* case – share a common thread; namely, the intellectual property right holder is taking steps to foster propagation or use of the underlying intellectual property, be it a copyrighted image or a patented invention. To the extent the examples contained in the legislative history may be understood to convey an intent of Congress, they identify instances in which licensing activities encourage practical applications of the invention or bring the patented technology to the market.

Although the statutory design of section 337(a)(3)(C) and the legislative history may allow such a reading, the overriding consideration is that the plain language of the statute does not limit the types of licensing activities that the Commission can consider. *See Garcia v. United States,* 469 U.S. 70, 75 (1984) ("[O]nly the most extraordinary showing of contrary intentions from [the legislative history] would justify a limitation on the 'plain meaning' of the statutory language."). Congress simply provided that an industry exists if there is "substantial investment in . . . exploitation [of the patent], including . . . licensing." 19 U.S.C. § 1337(a)(3)(C). The dictionary definition of the term "exploit" is (1) "to put to a productive use" and (2) "to take advantage of." WEBSTER'S NINTH at 438; *cf.* MERRIAM WEBSTER'S NEW INTERNATIONAL DICTIONARY (3d. ed. 1981) at 801. Thus, in ordinary usage, the term "exploitation" would cover licensing activities that "put [the patent] to a productive use", *i.e.*, bring a patented technology to market, as well as licensing activities that "take advantage of" the patent, *i.e.*, solely derive

revenue.[15] Congress's use of the term "licensing" therefore also covers both types of licensing activities. Accordingly, in assessing whether the domestic industry requirement has been met, we will also consider licensing activities for which the sole purpose is to derive revenue from existing production.

Because we have determined that litigation costs taken alone do not constitute investment in exploitation but that litigation costs related to licensing may, it follows that, in order to establish that a substantial investment in exploitation of the patent has occurred through licensing, a complainant must prove that each asserted activity is related to licensing. A complainant must also show that licensing activities pertain to the particular patent(s) at issue. Depending on the circumstances, such activities may include, among other things, drafting and sending cease and desist letters, filing and conducting a patent infringement litigation, conducting settlement negotiations, and negotiating, drafting, and executing a license. The mere fact, however, that a license is executed does not mean that a complainant can necessarily capture

---

[15] We note that the Federal Circuit has used the term "exploitation" in the context of the patent statute, 35 U.S.C. § 271, to mean commercial implementation, putting a patented invention into practice, or intellectual property development. *See e.g., Ethicon, Inc. v. U.S. Surgical Corp.*, 135 F.3d 1456, 1458 (Fed. Cir. 1998); *Rite-Hite Corp. v. Kelly Co., Inc.*, 56 F.3d 1538, 1569 (Fed. Cir. 1995); *Propat Int'l Corp. v. Rpost, Inc.*, 473 F.3d 1187, 1191 (Fed. Cir. 2007); *Inamed Corp. v. Kuzmak,* 249 F.3d 1356, 1362 (Fed. Cir. 2001).

all prior expenditures to establish a substantial investment in the exploitation of the patent.[16] A complainant must clearly link each activity to licensing efforts concerning the asserted patent.[17]

Even where the complainant establishes that certain acts are properly treated as investment in the exploitation of the patent, we must still determine whether that investment in exploitation is "substantial." That inquiry is a factual one that the Commission can undertake only after the parties present their facts and arguments, including evidence of the actual costs associated with each activity. The Commission may take into account, among other things, the type of activity, the relationship between the activity, licensing, and the patent at issue, and the amount of the investment. The Commission may also consider whether the activity is of a type that Congress explicitly indicated may establish a domestic industry; namely, activities that serve to encourage practical applications of the invention or bring the patented technology to the market. In weighing the evidence, the Commission has previously indicated that whether an investment is substantial "will depend on the industry in question, and the complainant's relative size." *Certain Stringed Musical Instruments and Components Thereof*, Inv. No. 337-TA-586, Comm'n Op. at 25 (May 2008).

---

[16] Conversely, the mere fact that a patent holder's efforts to obtain a license are unsuccessful does not *per se* mean that expenses associated with any related activities are not investments in the exploitation of the patent through licensing.

[17] We note that only activities that occurred before the filing of a complaint with the Commission are relevant to whether a domestic industry exists or is in the process of being established under sections 337(a)(2)-(3). *See Bally/Midway Mfg. Co. v. U.S. Int'l Trade Comm'n*, 714 F.2d 1117, 1121 (Fed. Cir. 1983).

2. Remand Is Necessary to Determine Whether Complainant PPC Can Show that a Domestic Industry Exists or Is In the Process of Being Established.[18]

PPC asks the Commission to consider five activities when addressing the domestic industry requirement: (1) research and development; (2) its EX connector-related activities; (3) its [[ ]]; (4) its Corning Gilbert litigation; and (5) its cease-and-desist letters. PPC Br. at 47-48; PPC Rep. Br. at 131. We address each in turn.

Although PPC relied predominantly on its license with [[ ]] to show a domestic industry, the ALJ "inferred that at least some portion of Mr. Noah Montena's [the inventor of the '539 design patent] salary, plus his time, effort and use of PPC's equipment and facilities, is attributable to his development of the design that became the '539 [design] patent." ID/RD at 121 (citing Montena Tr. at 395, 400). This inference is not warranted here. PPC presented no evidence of any investment in research and development related to the '539 design patent. The '539 design patent is a continuation of U.S. utility patent application number 08/910,509 ("the '509 application"), which is also the parent application of the asserted '194 patent. *See* '194 patent (CX-2). The '509 utility application, the '194 patent, and the '539 design patent all contain the exact same figures. *Compare* Figures 21 and 22 of the '194 patent (CX-2) and '539 design patent (CX-3). Without a showing to the contrary, we find that Mr. Montena's salary, time, effort, and use of PPC's equipment and facilities are more likely attributable to his

---

[18] Commissioner Lane finds that Complainant, PPC, did not establish a domestic industry in relation to the '539 patent. She finds that PPC's expenses associated with the [[ ]] litigation do not constitute a substantial investment in exploitation of the '539 patent through licensing under section 337(a)(3)(C). Thus, Commissioner Lane would reverse the ALJ's determination, and terminate the investigation as to the '539 patent with a finding of no violation.

development of the structural and functional design of the connector embodied in the '509 utility application and the '194 patent, than to his development of the ornamental design embodied in the '539 design patent. Moreover, PPC admits that it has not made a product covered by the '539 design patent. Accordingly, we conclude that any time and resources spent by PPC in researching or developing the ornamental design of the '539 design patent, even if they could be considered investments, are minimal and do not themselves constitute the "substantial" investment required by section 337(a)(3)(C).[19]

We decline to consider PPC's expenses related to its EX connectors because those connectors are covered by the '194 patent, not the '539 design patent. Although the '194 patent is in the same family as the '539 design patent, our statute specifically requires PPC to show a substantial investment in the exploitation of the patent at issue. PPC Rep. Br. at 135-36. Accordingly, we reject PPC's reliance on its EX connectors.

PPC further claims that its patent infringement litigation with [[ ]] should be considered an exploitation of the '539 design patent through licensing, because it resulted in a license covering the [[ ]] connector. As discussed above, however, we find that patent infringement litigation activities and their associated costs are not inherently related to licensing. A patent gives the patent holder a right to exclude others from infringing the patent. 35 U.S.C. § 271(a). When the patent holder files a patent infringement lawsuit, the patentee is simply exercising that right. PPC provided little if any evidence that it was seeking a license from [[ ]] rather than the

[19] We do not address the issue of whether and to what extent activities to develop a patented invention can be considered "exploitation" under the statute.

permanent injunction it actually sought and received from the district court. The generalized testimony of PPC's former Vice President and General Counsel, Stephen Malak, that PPC always tried to resolve infringement issues through other means before engaging in litigation, is not sufficient on its own to make this showing. Malak Tr. 153:21-154:9; 157:12-158:9. Moreover, the link between the litigation and licensing is particularly attenuated here because the subject license relied upon issued more than two years after the litigation terminated.

However, PPC's litigation activities and costs, including any relevant costs associated with conducting settlement negotiations and drafting and negotiating the license, may be related to licensing if, for instance, the patentee and accused infringer were in licensing negotiations before the suit was filed or while it was ongoing, if the patentee made a concerted effort to license the patent, or if the patentee has an established licensing program. The record is not fully developed on these points. Therefore, we vacate the ALJ's determination that PPC met the domestic industry requirement for the '539 design patent and remand for further proceedings consistent with this opinion.

On remand, PPC must show that each asserted litigation activity is related to licensing. In addition, PPC must show that these activities are related to the '539 design patent. For example, although the [[ ]] litigation was clearly connected to the '539 design patent, the license makes no mention of the patent. And finally, PPC must document the costs incurred for each activity. PPC cannot rely on its broad allegation that it spent [[ ]] on its litigation with [[ ]] and that this is a substantial investment in the patent's exploitation through licensing. Litigation activities may need to be broken down into their constituent parts. The ALJ may presume that

license drafting and execution are associated with licensing, but PPC must still prove that the license is related to the patent at issue and what the related costs were. As described above, the ALJ may also consider the presence and number of licenses and the presence of documents or activities soliciting licenses as well as any other relevant evidence to determine whether there has been "substantial" investment in exploitation through licensing.

Before the ALJ, PPC relied on its litigation with Corning Gilbert Inc. ("Corning Gilbert") and the ALJ relied on it in his decision as well. ID at 122. PPC sued Corning Gilbert for patent infringement of the '539 design patent on August 21, 2001, only months after filing suit against [[ ]], in the United States District Court for the District of Arizona. *See* Malak Tr. at 190:24-191:9. This case was dismissed on February 25, 2004 based on a settlement agreement. *Id.* PPC has not shown that a license issued, nor has PPC asserted that this litigation was in pursuit of a license. Because we concluded above that patent infringement litigation activities alone cannot form the basis of a domestic industry, we do not consider PPC's Corning Gilbert litigation in determining whether there has been a substantial investment in the exploitation of the '539 design patent. In addition, PPC does not appear to renew its arguments relating to the Corning Gilbert litigation before the Commission. Accordingly, we do not believe remand is necessary to determine if this litigation is related to licensing.

Finally, PPC asks the Commission to consider several cease-and-desist letters. Cease-and-desist letters are not inherently related to licensing, as they may simply instruct the recipient to cease the infringing activity. On the other hand, they may be related to licensing if, for example, they offer the recipient the option of taking a license or they form part of a concerted

licensing program or effort. If PPC wishes to rely on these letters, it must show on remand that the cease-and-desist letters are related to licensing, and are related to the '539 design patent. PPC must also establish the costs of drafting and sending those letters.

The Commission has determined to extend the target date to allow the ALJ time to set a schedule and a new target date to accommodate the remand proceedings.

IV. REMEDY

Section 337 provides that, "[i]f the Commission determines, as a result of an investigation under this section, that there is a violation of this section, it shall direct that the articles concerned, imported by any person violating the provision of this section, be excluded from entry into the United States . . . ." 19 U.S.C. § 1337(d)(1). The Commission issues two types of exclusion orders under this provision, a "limited exclusion order" and a "general exclusion order." *See Kyocera Wireless Corp. v. Int'l Trade Comm'n*, 545 F.3d 1340, 1356 (Fed. Cir. 2008). When a violation is established, a limited exclusion order is typically appropriate unless under section 337(d)(2), a complainant shows that "(A) a general exclusion from entry of articles is necessary to prevent circumvention of an exclusion order limited to products of named persons; or (B) there is a pattern of violation of this section and it is difficult to identify the source of infringing goods." 19 U.S.C. § 1337(d)(2). "Because of its considerable impact on international trade, potentially extending beyond the parties and articles involved in the investigation, more than just the interests of the parties is involved. Therefore, the Commission exercises caution in issuing general exclusion orders . . . ." *Certain Agricultural Tractors Under 50 Power Takeoff Horsepower*, Inv. No. 337-TA-380, Comm'n. Op. at 21 (Mar. 12, 1997).

PPC has requested that the Commission issue a general exclusion order based on a finding that the defaulting respondents have violated section 337 with respect to the '539, '076, '257, and '194 patents. When complainant requests a limited exclusion order against defaulting respondents, "the Commission shall presume the facts alleged in the complaint to be true." 19 C.F.R. § 210.16(c)(1). This presumption does not apply when general exclusion orders are sought, because such orders "are directed to goods from all sources, including future and unknown current importers." *Certain Plastic Molding Machines With Control Systems Having Programmable Operator Interfaces Incorporating General Purpose Computers, and Components Thereof*, Inv. No. 337-TA-462, Comm'n. Op. at 6 (Apr. 2, 2003). Instead, to issue a general exclusion order based on a violation of section 337 by defaulting respondents, complainant must establish that a violation has occurred by "substantial, reliable, and probative evidence . . . ." 19 U.S.C. § 1337(g)(2)(B). Only then will the Commission consider whether to issue a general exclusion order.

The ALJ recommended a general exclusion order for the '194 and '076 patents. For both patents, he found that a general exclusion order "is necessary to prevent circumvention of a limited exclusion order" under section 337(d)(2)(A). The ALJ found a likelihood of circumvention based on evidence that defaulting respondents Yangzhou ZE, Yangzhou FTC, and ZE are alter egos for another defaulting respondent, Fei Yu, all of which are involved in the sale and importation of the accused connectors. He also based his conclusion on "the ease with which individual(s) operating these entities could establish new companies and continue to sell

infringing compression connectors for importation if barred by a limited exclusion order." ID at 129-30 (citations omitted).

In connection with the '194 patent, but not the '076 patent, the ALJ also found that "there is a pattern of violation of this section and it is difficult to identify the source of infringing goods" under section 337(d)(2)(B). He based this finding on (1) infringement by the defaulting respondents; (2) infringement by respondents Edali and Aska who were terminated from this investigation based on a consent order (Order No. 5); (3) testimony regarding two prior lawsuits that resulted in favorable verdicts that the '194 patent is valid and infringed; and (4) testimony regarding two more lawsuits that resulted in licenses to practice the '194 patent. *Id.* at 132. The ALJ credited PPC's evidence of "certain non-respondents selling for importation, importing, or selling after importation coaxial cable connectors alleged to infringe claims 1 and 2 of the '194 patent." *Id.* at 133 (citing Complainant PPC's Findings of Fact at III.C.5.1-20, IIIC.8.1-IIIC.12.20, III.C.16.1-20, and III.C.19.1-20).

The ALJ found that it is difficult to identify the source of the products that infringe the '194 patent based on testimony of PPC's witnesses, Mr. Malak, Mr. White, and Mr. Noll, regarding several instances in which alleged infringers refused to name their suppliers (Malak Tr. at 156:3-23), the widespread availability of allegedly infringing connectors on the Internet and the difficulty Mr. White had in identifying the source of these connectors (White Tr. at 622:20-625:22), and Mr. Noll's experiences with foreign companies concealing their connector manufacturing activity from PPC by restricting access to their facilities, failing to provide

identity markings on their connectors, and mismarking their connectors with PPC's name (Noll Tr. at 1449:9-1451:17; 1468:1-7). ID at 132-34; CX-307.

A. Remedy for the '194 Patent

The evidence shows that, with respect to the '194 patent, "there is a pattern of violation of this section and it is difficult to identify the source of infringing goods" as required by section 337(d)(2)(B). Thus, we find the appropriate remedy for the section 337 violation is a general exclusion order. We agree with the ALJ that the section 337 violations by respondents Edali and Aska, who were terminated by consent order, as well as the violations by the defaulting respondents are all probative of a pattern of violation. ID at 132-133. Although an infringement finding by a district court does not necessarily indicate that a violation of section 337 has occurred, we find PPC's successful assertions of the '194 patent probative of a pattern of violation because they show that there were numerous sources of infringing goods. *See* Malak Tr. at 181:12-183:21, 192:17-193:11. We agree with the ALJ that PPC's cease-and-desist campaign against alleged infringement by non-respondents also tends to show a pattern of violation with respect to the '194 patent. ID at 133-34. Indeed, some of the addressees of the cease-and-desist letters in the record are located abroad and PPC suspected them of importing their coaxial cable connectors into the United States. *See* CX-90C.

We further agree with the ALJ that PPC has established that it is difficult to identify the source of the infringing products. ID at 134-35. The evidence shows that distributors of allegedly infringing connectors refuse to identify their suppliers. Malak Tr. at 156:3-23; ID at 134-35. Moreover, the allegedly infringing cable connectors are widely available for sale on the

Internet but, in most cases, the source of these connectors cannot be identified. White Tr. at 622:20-625:22; ID at 135-36. In some cases, foreign companies have even concealed their connector manufacturing activity from PPC by restricting access to their facilities, failing to provide identifying markings on their connectors, or mismarking their connectors with PPC's name. Noll Tr. at 1449:9-1451:17; 1468:1-7; CX-307; ID at 135-56. We find that the lack of clarity regarding the relationship between defaulting respondents ZE, Yangzhou ZE, and Yangzhou FTC with Fei Yu also suggests that it is difficult to identify the source of infringing connectors.

We reject, however, PPC's argument that, under section 337(d)(2)(A), "a general exclusion order is necessary to prevent circumvention of a limited exclusion order" covering the '194 patent. We find that PPC's lack of knowledge about the relationship between the defaulting respondents is insufficient to infer an intent to circumvent the Commission's remedial order. Nevertheless, based on section 337(d)(2)(B) and the evidence of a pattern of violation and unknown sources, we have determined to issue a general exclusion order to remedy the violation of section 337 that has occurred in connection with the '194 patent.

B. <u>Remedy for the '076 Patent</u>

The appropriate remedy for the section 337 violation with respect to the '076 patent is a limited exclusion order because PPC has not met the requirements of section 337(d)(2)(A) or (B). We find that infringement by the defaulting respondents and two other non-respondents is insufficient to establish a "pattern of violation" under section 337(d)(2)(B). Moreover, PPC has not shown that a general exclusion order is necessary to prevent circumvention in this case. The

Commission's limited exclusion order excludes products found to infringe that are manufactured or imported by or on behalf of the defaulting respondents, as well as their "affiliated companies, parents, subsidiaries, or other related business entities, or their successors or assigns." Thus, even if the defaulting respondents were to form new entities, their actions would be covered by the Commission's limited exclusion order. *See Ground Fault Circuit Interrupters and Products Containing Same*, Inv. No. 337-TA-615, Comm'n. Op. at 26 (Mar. 26, 2009). Accordingly, we have determined to issue a limited exclusion order to remedy the violation of section 337 that has occurred with respect to the '076 patent. Based upon the language of this order, CBP should exclude only the covered products of the defaulting respondents, Hanjiang Fei Yu Electronics Equipment Factory of China, Zhongguang Electronics of China, Yangzhou Zhongguang Electronics Co. of China, and Yangzhou Zhongguang Foreign Trade Co. Ltd. of China and their "affiliated companies, parents, subsidiaries, or other related business entities, or their successors or assigns."

V. THE PUBLIC INTEREST

When determining whether to issue remedial orders for a violation of section 337, the Commission weighs the effect of the orders on four public interest factors: (1) the public health and welfare, (2) competitive conditions in the U.S. economy, (3) the production of like or directly competitive articles in the U.S., and (4) U.S. consumers. 19 U.S.C. § 1337(d). The IA does not believe there are any public interest concerns that would preclude issuance of the exclusion orders. IA Br. at 40. In the IA's view, there are no major public health and welfare implications and there is no evidence that U.S. demand for coaxial cable connectors cannot be

met by other entities, including PPC. *Id.* PPC agrees with the IA. PPC Br. at 85-86. No one argues otherwise.

We agree with the IA and PPC that the exclusion orders do not implicate any of the statutory "public interest" factors. Thus, having considered the submissions of the parties in light of the statutory factors set forth in 19 U.S.C. § 1337(d), we find that the public interest does not preclude issuance of the exclusion orders.

VI. BOND

When the Commission issues an exclusion order, infringing products are nonetheless entitled to entry under bond during the Presidential review period. 19 U.S.C. § 1337(j). The Commission must set the amount of the bond at a level sufficient to protect complainants from injury. *Id.* When reliable pricing information is available, the Commission has often set the bond amount at a level that would eliminate the differential between the domestic product and the imported, infringing product. *See Certain Microsphere Adhesives, Processes for Making Same, and Products Containing Same, Including Self-stick Repositionable Notes,* Inv. No. 337-TA-366, USITC Pub. 2949, Comm'n. Op., 1996 ITC LEXIS 280, at *44 (1996). It is Complainant's burden to present evidence to support its recommended bond and the failure to do so may result in no bond being set. *Certain Liquid Crystal Display Devices*, Inv. 337-TA-631, Commission Op. at 27-28 (2009) (failure to present price differential evidence precluded a bond); *Certain Rubber Antidegradants*, Inv. No. 337-TA-533 Commission Op. at 40 (2006) (rejecting request for a 100% bond, and stating that "[i]n our view, the complainant has the burden of supporting any proposition it advances, including the amount of bond.").

Here, the ALJ recommended a bond of 13 cents per infringing article. ID at 161-63. The ALJ based his recommendation on the testimony of PPC's Vice President of Sales regarding a price differential between its EX connector and "offshore products or knockoffs." *Id.* at 162 (quoting White Tr. at 634:15-635:1).

The ALJ credited the testimony from PPC's witness that the price differential is about 13 cents per connector, although ALJ acknowledged that this testimony was an estimate. ID at 148-51. Complainant was not able to obtain the necessary discovery from the defaulting respondents because of their failure to participate in the investigation. PPC should not be penalized for this. Therefore, we have determined to set a bond of 13 cents for products of the defaulting respondents covered by the limited exclusion order. As to the general exclusion order, however, we have determined to apply the 13 cent bond only against the covered products of the defaulting respondents, but because this evidence is an estimate, we have determined to set a zero bond amount for all other products covered by the general exclusion order.

VII. CONCLUSION

The Commission determined not to review the ALJ's determination that the defaulting respondents violated section 337 with respect to the '194 and '076 patents and has determined to issue a general exclusion order covering articles that infringe the asserted claims of the '194 patent and a limited exclusion order directed to the articles of the defaulting respondents found to infringe the claim of the '076 design patent. We find that these remedies are not precluded by consideration of the statutory public interest factors. For the Presidential review period, we determine to set a bond amount of 13 cents per unit for defaulting respondents' products covered

by either the general or limited exclusion orders, and zero bond for any other products covered by the general exclusion order.

The Commission has further determined to modify the ALJ's construction of two claim terms found in claim 1 of the '257 patent and to affirm the ALJ's determination that the accused products of the active respondents Fu-Ching and Gem do not infringe claim 1 of the '257 patent for modified reasons, but reverse his conclusion that complainant PPC's product meets the technical prong of the domestic industry requirement and that the four defaulting respondents violate section 337 with respect to the '257 patent. Finally, the Commission has determined to vacate the ALJ's finding that a domestic industry exists under section 337(a)(3)(C) with respect to the '539 patent and remand to the ALJ for further proceedings.

By order of the Commission.

Marilyn R. Abbott
Secretary to the Commission

Issued: April 14, 2010

CERTAIN COAXIAL CABLE CONNECTORS AND COMPONENTS THEREOF AND PRODUCTS CONTAINING SAME **337-TA-650**

CERTIFICATE OF SERVICE

I, Marilyn R. Abbott, hereby certify that the attached **COMMISSION OPINION** has been served by hand upon the Commission Investigative Attorney, Kevin Baer, Esq., and the following parties as indicated on April 14, 2010.

Marilyn R. Abbott, Secretary JN6
U.S. International Trade Commission
500 E Street, SW
Washington, DC 20436

On Behalf of Complainant John Mezzalingua Associates, Inc.:

Patrick D. Gill, Esq.
RODE & QUALEY
55 W. 39th Street
New York, NY 10018

( ) Via Hand Delivery
(X) Via Overnight Mail
( ) Via First Class Mail
( ) Other: _____

On Behalf of Respondents GEM Electronics and Fu Ching Technical Industry Co., LTD.:

John R. Horvack, Jr., Esq.
CARMODY & TORRANCE, LLP
195 Church Street
New Haven, CT 06509

( ) Via Hand Delivery
(X) Via Overnight Mail
( ) Via First Class Mail
( ) Other: _____

UNITED STATES INTERNATIONAL TRADE COMMISSION
Washington, D.C. 20436

In the Matter of **CERTAIN COAXIAL CABLE CONNECTORS AND COMPONENTS THEREOF AND PRODUCTS CONTAINING SAME**	**Investigation No. 337-TA-650**

NOTICE OF COMMISSION ISSUANCE OF A GENERAL EXCLUSION ORDER, A LIMITED EXCLUSION ORDER, AND A REMAND ORDER; EXTENSION OF TARGET DATE

AGENCY: U.S. International Trade Commission.

ACTION: Notice.

SUMMARY: Notice is hereby given that the U.S. International Trade Commission has determined that there is a violation of 19 U.S.C. § 1337 by Hanjiang Fei Yu Electronics Equipment Factory of China; Zhongguang Electronics of China; Yangzhou Zhongguang Electronics Co. of China; and Yangzhou Zhongguang Foreign Trade Co. Ltd. of China (collectively, "defaulting respondents") with respect to U.S. Patent Nos. 6,558,194 ("the '194 patent") and D519,076 ("the '076 patent") in the above-captioned investigation. The Commission has also determined that neither respondents Fu-Ching Technical Industry Co., Ltd. of Taiwan ("Fu-Ching"), Gem Electronics, Inc. of Windsor, Connecticut ("Gem") (collectively, "active respondents") nor the defaulting respondents have violated section 337 in connection with U.S. Patent No. 5,470,257 ("the '257 patent"). The Commission has determined to issue a general exclusion order and a limited exclusion order. The Commission has also determined to issue a remand order remanding the portion of the investigation relating to U.S. Patent No. D440,539 ("the '539 patent") to the administrative law judge ("ALJ") for further proceedings. The Commission has determined to extend the target date by 61 days until June 1, 2010.

FOR FURTHER INFORMATION CONTACT: Daniel E. Valencia, Office of the General Counsel, U.S. International Trade Commission, 500 E Street, S.W., Washington, D.C. 20436, telephone (202) 205-1999. Copies of non-confidential documents filed in connection with this investigation are or will be available for inspection during official business hours (8:45 a.m. to 5:15 p.m.) in the Office of the Secretary, U.S. International Trade Commission, 500 E Street, S.W., Washington, D.C. 20436, telephone (202) 205-2000. General information concerning the Commission may also be obtained by accessing its Internet server at *http://www.usitc.gov*. The public record for this investigation may be viewed on the Commission's electronic docket (EDIS) at *http://edis.usitc.gov*. Hearing-impaired persons are advised that information on this matter can be obtained by contacting the Commission's TDD terminal on (202) 205-1810.

SUPPLEMENTARY INFORMATION: The Commission instituted this investigation on May

30, 2008, based on a complaint filed by John Mezzalingua Associates, Inc. d/b/a PPC, Inc. of East Syracuse, New York ("PPC"). 73 *Fed. Reg.* 31145 (May 30, 2008). The complaint alleged violations of section 337 of the Tariff Act of 1930 (19 U.S.C. § 1337) in the importation into the United States, the sale for importation, and the sale within the United States after importation of certain coaxial cable connectors and components thereof and products containing the same by reason of infringement of the '257, '539, '194, and '076 patents. The complaint named eight respondents. After institution, two respondents were terminated from the investigation based on consent orders, and the following four respondents were found in default: Hanjiang Fei Yu Electronics Equipment Factory of China; Zhongguang Electronics of China; Yangzhou Zhongguang Electronics Co. of China; and Yangzhou Zhongguang Foreign Trade Co. Ltd. of China. The only respondents actively remaining in this investigation are Fu-Ching and Gem.

On October 13, 2009, the ALJ issued his final initial determination ("ID") finding, based on substantial, reliable, and probative evidence, that the defaulting respondents violated section 337 in the importation into the United States, the sale for importation, and the sale within the United States after importation of certain coaxial cable connectors and components thereof and products containing the same by reason of infringement of the '257, '539, '076, and '194 patents. The ALJ found that the active respondents have not violated section 337. Based upon petitions for review filed by PPC and the Commission Investigative Attorney, the Commission, on December 14, 2009, determined to review (1) the ALJ's findings and conclusions relating to whether a violation of section 337 has occurred with respect to the '257 patent, including the issues of claim construction, infringement, validity, and domestic industry and (2) the ALJ's finding that PPC has met the domestic industry requirement for the '539 patent.

In its review notice, the Commission asked several questions regarding the issues on review, and invited the public to comment on the domestic industry requirement under section 337(a)(3)(C), 19 U.S.C. § 1337(a)(3)(C). On January 13, 2010, the parties filed opening submissions addressing the issues on review as well as remedy, public interest, and bonding, and on January 27, 2010, the parties filed response submissions. Several non-parties also filed submissions addressing the questions regarding domestic industry in the Commission's review notice.

On January 29, 2010, the law firm of Covington and Burling LLP filed, on behalf of several non-parties, a motion for leave to correct a reply submission, which it had timely filed on January 27, 2010. No one opposed this motion. The Commission has determined to grant this motion.

Having examined the record of this investigation, including the ALJ's final ID and all the written submissions, the Commission has determined to vacate in part the ALJ's finding that complainant PPC established a domestic industry for the '539 patent and to issue an order remanding the portion of the investigation relating to the '539 patent to the ALJ for further proceedings. The Commission has also determined to modify the ALJ's constructions of "fastener means" and "engagement means" in the '257 patent and consequently reverse the ALJ's finding that complainant PPC established a domestic industry for the '257 patent and his finding

that a violation has occurred with respect to the '257 patent. The Commission has determined that the defaulting respondents violated section 337 by reason of infringement of the '076 and '194 patents. The Commission has determined that the active respondents, Fu-Ching and Gem, did not violate section 337.

The Commission has determined that the appropriate form of relief is a limited exclusion order and a general exclusion order. The limited exclusion order prohibits the unlicensed entry of coaxial cable connectors and components thereof and products containing the same that infringe the claim of the '076 design patent and are manufactured abroad by or on behalf of, or imported by or on behalf of, any of the defaulting respondents. The general exclusion order prohibits the unlicensed entry of coaxial cable connectors and components thereof and products containing the same that infringe claim 1 and/or 2 of the '194 patent.

The Commission further determined that the public interest factors enumerated in section 337(d) (19 U.S.C. § 1337(d)) do not preclude issuance of the limited exclusion order and the general exclusion order. Finally, the Commission determined that the amount of bond during the Presidential review period (19 U.S.C. § 1337(j)) shall be in the amount of thirteen (13) cents per coaxial connector of the defaulting respondents that is subject to the limited exclusion order or the general exclusion order. No bond is required for any other coaxial cable connector or component thereof or product containing the same covered by the general exclusion order. The Commission's order was delivered to the President and the United States Trade Representative on the day of its issuance.

Finally, the Commission has determined to extend the target date from March 31, 2010, to June 1, 2010, to allow the ALJ time to consider the Commission's remand instructions. The Commission has instructed the ALJ to make his determination on remand at the earliest practicable time, and to extend the target date of the above-captioned investigation as he deems necessary to accommodate the remand proceedings.

The authority for the Commission's determination is contained in section 337 of the Tariff Act of 1930, as amended (19 U.S.C. § 1337), and in sections 210.42-50 of the Commission's Rules of Practice and Procedure (19 C.F.R. §§ 210.42-50).

By order of the Commission.

Marilyn R. Abbott
Secretary to the Commission

Issued: March 31, 2010

UNITED STATES INTERNATIONAL TRADE COMMISSION
Washington, D.C. 20436

In the Matter of **CERTAIN COAXIAL CABLE CONNECTORS AND COMPONENTS OF THE SAME AND PRODUCTS CONTAINING THE SAME**	**Inv. No. 337-TA-650**

GENERAL EXCLUSION ORDER

The Commission has determined that there is a violation of section 337 of the Tariff Act of 1930 (19 U.S.C. § 1337) in the unlawful importation and sale by Hanjiang Fei Yu Electronics Equipment Factory, Zhongguang Electronics, Yangzhou Zhongguang Electronics Co., Ltd., and Yangzhou Zhongguang Foreign Trade Co., Ltd., each of Yangzhou, China ("the Respondents") of certain coaxial cable connectors that infringe one or more of claims 1 and 2 of U.S. Patent No. 6,558,194 ("the '194 patent"). Having reviewed the record in this investigation, including the written submissions of the parties, the Commission has made a determination on the issues of remedy, the public interest, and bonding for the '194 patent. The Commission has determined that a general exclusion from entry for consumption is the appropriate remedy because there is a pattern of violation of section 337 and it is difficult to identify the source of infringing products. Accordingly, the Commission has determined to issue a general exclusion order prohibiting the unlicensed importation of infringing coaxial cable connectors.

The Commission has also determined that the public interest factors enumerated in 19 U.S.C. §§ 1337(d) do not preclude the issuance of the general exclusion order, and that the bond during the Presidential review period shall be in the amount of 13 cents per unit for Respondents' coaxial cable connectors.

Accordingly, the Commission hereby **ORDERS** that:

1. Coaxial cable connectors covered by one or more of claims 1 and 2 of U.S. Patent No. 6,558,194 are excluded from entry for consumption, entry for consumption from a foreign-trade zone, or withdrawal from a warehouse for consumption, for the remaining term of the patent, except under license of the patent owner or as provided by law.

2. Notwithstanding paragraph 1 of this Order, the aforesaid coaxial cable connectors are entitled to entry into the United States for consumption, entry for consumption from a foreign-trade zone, or withdrawal from a warehouse for consumption, under bond in the amount of 13 cents per imported coaxial cable connector of Respondents and otherwise without bond, from the day after this Order is received by the United States Trade Representative as delegated by the President, 70 *Fed. Reg.* 43251 (July 21, 2005), until such time as the United States Trade Representative notifies the Commission that this action is approved or disapproved but, in any event, not later than sixty (60) days after the date of receipt of this action.

3. At the discretion of U.S. Customs and Border Protection ("CBP") and pursuant to procedures it establishes, persons seeking to import coaxial cable connectors that are potentially subject to this Order may be required to certify that they are familiar with the terms of this Order, that they have made appropriate inquiry, and thereupon state that, to the best of their knowledge

and belief, the products being imported are not excluded from entry under paragraph 1 of this Order. At its discretion, Customs may require persons who have provided the certification described in this paragraph to furnish such records or analyses as are necessary to substantiate the certification.

4. In accordance with 19 U.S.C. § 1337(l), the provisions of this Order shall not apply to coaxial cable connectors imported by and for the use of the United States, or imported for, and to be used for, the United States with the authorization or consent of the Government.

5. The Commission may modify this Order in accordance with the procedure described in section 210.76 of the Commission's Rules of Practice and Procedure (19 C.F.R. § 210.76).

6. The Commission Secretary shall serve copies of this Order upon each party of record in this investigation and upon the Department of Health and Human Services, the Department of Justice, the Federal Trade Commission, and the Bureau of Customs and Border Protection.

7. Notice of this Order shall be published in the *Federal Register*.

By order of the Commission.

Marilyn R. Abbott
Secretary to the Commission

Issued: March 31, 2010

UNITED STATES INTERNATIONAL TRADE COMMISSION
Washington, D.C. 20436

In the Matter of **CERTAIN COAXIAL CABLE CONNECTORS AND COMPONENTS OF THE SAME AND PRODUCTS CONTAINING THE SAME**	**Inv. No. 337-TA-650**

LIMITED EXCLUSION ORDER

The Commission has determined that there is a violation of section 337 of the Tariff Act of 1930, as amended, 19 U.S.C. § 1337, in the unlawful importation and sale by Hanjiang Fei Yu Electronics Equipment Factory, Zhongguang Electronics, Yangzhou Zhongguang Electronics Co., Ltd., and Yangzhou Zhongguang Foreign Trade Co., Ltd., each of Yangzhou, China ("the Respondents") of coaxial cable connectors by reason of infringement of the claim of U.S. Design Patent No. D519,076 ("the '076 patent"). Having reviewed the record in this investigation, including the written submissions of the parties, the Commission has made a determination on the issues of remedy, the public interest, and bonding for the '076 patent. The Commission has determined that the appropriate form of relief is a limited exclusion order prohibiting the unlicensed entry of infringing coaxial cable connectors manufactured by or on behalf of, or imported by or on behalf of, Respondents or any of their affiliated companies, parents, subsidiaries, licensees, or other related business entities, or their successors or assigns.

The Commission has determined that the public interest factors enumerated in 19 U.S.C. §§ 1337 (d) do not preclude issuance of the limited exclusion order. Finally, the Commission has

determined that the bond during the Presidential review period shall be in the amount of 13 cents per coaxial cable connectors that are subject to this order.

Accordingly, the Commission hereby **ORDERS** that:

1. Coaxial cable connectors covered by the claim of U.S. Design Patent No. D519,076 that are manufactured abroad by or on behalf of, or imported by or on behalf of, Respondents or any of their affiliated companies, parents, subsidiaries, or other related business entities, or their successors or assigns are excluded from entry for consumption into the United States, entry for consumption from a foreign trade zone, or withdrawal from a warehouse for consumption, for the remaining term of the patent, except under license of the patent owner or as provided by law.

2. Notwithstanding paragraph 1 of this Order, the aforesaid products are entitled to entry for consumption into the United States, entry for consumption from a foreign trade zone, or withdrawal from a warehouse for consumption, under bond in the amount of 13 cents per unit of imported coaxial cable connectors, from the day after this Order is received by the United States Trade Representative as delegated by the President, 70 *Fed. Reg.* 43251 (July 21, 2005), until such time as the United States Trade Representative notifies the Commission that this action is approved or disapproved but, in any event, not later than sixty (60) days after the date of receipt of this action.

3. At the discretion of U.S. Customs and Border Protection ("CBP") and pursuant to procedures it establishes, persons seeking to import coaxial cable connectors that are potentially subject to this Order may be required to certify that they are familiar with the terms of this Order,

that they have made appropriate inquiry, and thereupon state that, to the best of their knowledge and belief, the products being imported are not excluded from entry under paragraph 1 of this Order. At its discretion, Customs may require persons who have provided the certification described in this paragraph to furnish such records or analyses as are necessary to substantiate the certification.

4. In accordance with 19 U.S.C. § 1337(l), the provisions of this Order shall not apply to coaxial cable connectors that are imported by and for the use of the United States, or imported for, and to be used for, the United States with the authorization or consent of the Government.

5. The Commission may modify this Order in accordance with the procedures described in Rule 210.76 of the Commission's Rules of Practice and Procedure, 19 C.F.R. § 210.76.

6. The Commission Secretary shall serve copies of this Order upon each party of record in this investigation and upon the Department of Health and Human Services, the Department of Justice, the Federal Trade Commission, and Customs and Border Protection.

7. Notice of this Order shall be published in the *Federal Register*.

By Order of the Commission.

Marilyn R. Abbott
Secretary to the Commission

Issued: March 31, 2010

UNITED STATES INTERNATIONAL TRADE COMMISSION
Washington, D.C. 20436

In the Matter of **CERTAIN COAXIAL CABLE CONNECTORS AND COMPONENTS THEREOF AND PRODUCTS CONTAINING SAME**	**Investigation No. 337-TA-650**

REMAND ORDER

The Commission instituted this investigation on May 30, 2008, based on a complaint filed by John Mezzalingua Associates, Inc. d/b/a PPC, Inc. of East Syracuse, New York ("PPC"). 73 *Fed. Reg.* 31145 (May 30, 2008). The complaint alleged violations of section 337 of the Tariff Act of 1930 (19 U.S.C. § 1337) in the importation into the United States, the sale for importation, and the sale within the United States after importation of certain coaxial cable connectors and components thereof and products containing the same by reason of infringement of U.S. Patent Nos. 5,470,257 ("the '257 patent"); D440,539 ("the '539 patent"); 6,558,194 ("the '194 patent"); and D519,076 ("the '076 patent"). The complaint named eight respondents. After institution, two respondents were terminated from the investigation based on consent orders, and the following four respondents were found in default: Hanjiang Fei Yu Electronics Equipment Factory of China; Zhongguang Electronics of China; Yangzhou Zhongguang Electronics Co. of China; and Yangzhou Zhongguang Foreign Trade Co. Ltd. of China. The only respondents remaining in this investigation are Fu-Ching Technical Industry Co., Ltd. of Taiwan ("Fu-Ching") and Gem Electronics, Inc. of Windsor, Connecticut ("Gem") (collectively, "active respondents").

On October 13, 2009, the Administrative Law Judge issued his final initial determination ("ID") finding, based on substantial, reliable, and probative evidence, that the defaulting

respondents violated section 337 in the importation into the United States, the sale for importation, and the sale within the United States after importation of certain coaxial cable connectors and components thereof and products containing the same by reason of infringement of the '257, '539, '076, and '194 patents. The Administrative Law Judge found that the active respondents have not violated section 337. Based upon petitions for review filed by PPC and the Commission Investigative Attorney, the Commission, on December 14, 2009, determined to review (1) the Administrative Law Judge's findings and conclusions relating to whether a violation of section 337 has occurred with respect to the '257 patent, including the issues of claim construction, infringement, validity, and domestic industry and (2) the Administrative Law Judge's finding that PPC has met the domestic industry requirement for the '539 patent.

Having examined the record of this investigation, including the Administrative Law Judge's final ID and all the written submissions, the Commission has determined *inter alia* that the active respondents, Gem and Fu-Ching, are not in violation of section 337 and that the defaulting respondents have violated section 337 by reason of infringement of the '076 and '194 patents. The Commission has determined to vacate in part the Administrative Law Judge's finding that complainant PPC established a domestic industry for the '539 patent and to remand the portion of the investigation relating to the '539 patent to the Administrative Law Judge for further proceedings.

Accordingly, the Commission hereby **ORDERS** that:

1. The question of whether PPC has made a substantial investment in exploitation of the '539 patent is remanded to the Administrative Law Judge for a remand initial determination ("RID") consistent with the principles set forth in the Commission's Opinion.

2. The Administrative Law Judge shall make findings consistent with the

Commission opinion and shall consider, among other things, (1) what is the cost of each individual activity alleged by PPC to be related to licensing, (2) whether each individual activity and its cost is associated with licensing, and (3) whether each individual activity and its cost is associated with the '539 patent.

3. The Administrative Law Judge shall issue his RID at the earliest practicable time.

4. The Administrative Law Judge shall issue an initial determination within 30 days of this Order extending the target date as he deems necessary to accommodate the remand proceedings and a three (3) month period of Commission review.

5. The RID will be processed in accordance with Commission rules 210.42-46. Any petitions for review will be due 10 days after service of the RID. Responses to any petition for review will be due 7 days after service of the petition. The RID will become the Commission's final determination 45 days after issuance unless the Commission orders review.

6. The Administrative Law Judge may otherwise conduct the remand proceedings as he deems appropriate, including reopening the record.

7. The Secretary shall serve copies of this Order upon each party of record in this investigation.

8. Notice of this Order shall be published in the Federal Register.

By order of the Commission.

Marilyn R. Abbott
Secretary to the Commission

Issued: March 31, 2010

CERTAIN COAXIAL CABLE CONNECTORS AND COMPONENTS THEREOF AND PRODUCTS CONTAINING SAME **337-TA-650**

CERTIFICATE OF SERVICE

I, Marilyn R. Abbott, hereby certify that the attached **NOTICE OF COMMISSION ISSUANCE OF A GENERAL EXCLUSION ORDER, A LIMITED EXCLUSION ORDER, AND REMAND ORDER; EXTENTION OF TARGET DATE** has been served by hand upon the Commission Investigative Attorney, Kevin Baer, Esq., and the following parties as indicated on March 31,2010.

Marilyn R. Abbott, Secretary
U.S. International Trade Commission
500 E Street, SW
Washington, DC 20436

On Behalf of Complainant John Mezzalingua Associates, Inc.:

Patrick D. Gill, Esq.
RODE & QUALEY
55 W. 39th Street
New York, NY 10018

( ) Via Hand Delivery
( ) Via Overnight Mail
(X) Via First Class Mail
( ) Other: _____

On Behalf of Respondents GEM Electronics and Fu Ching Technical Industry Co., LTD.:

Michael L. Doane, Esq.
ADDUCI MASTRIANI & SCHAUMBERG LLP
1200 Seventeenth Street, N.W.
Washington, DC 20036

( ) Via Hand Delivery
( ) Via Overnight Mail
(X) Via First Class Mail
( ) Other: _____

GOVERNMENT AGENCIES:

Edward T. Hand, Chief
Foreign Commerce Section
Antitrust Division
U.S. Department of Justice
450 5th Street NW – Room 11000

( ) Via Hand Delivery
( ) Via Overnight Mail
(X) Via First Class Mail
( ) Other: _____

Washington, DC 20530

U.S. Bureau of Customs and Border Protection Intellectual Property Rights Branch Mint Annex Building 799 9th Street, NW -7th floor Washington, DC 20229-1177	( ) Via Hand Delivery ( ) Via Overnight Mail (x) Via First Class Mail ( ) Other: _____
Elizabeth Kraus, Deputy Director International Antitrust, Office of International Affairs Federal Trade Commission 600 Pennsylvania Avenue, Room 498 Washington, DC 20580	( ) Via Hand Delivery ( ) Via Overnight Mail (x) Via First Class Mail ( ) Other: _____
Richard Lambert, Esq. Office of Technology Development Services Dept. of Health & Human Services National Institutes of Health 6610 Rockledge Drive - Room 2800 MSC 6606 Bethesda, MD 20892	( ) Via Hand Delivery ( ) Via Overnight Mail (x) Via First Class Mail ( ) Other: _____

UNITED STATES INTERNATIONAL TRADE COMMISSION
Washington, D.C.

In the Matter of **CERTAIN COAXIAL CABLE CONNECTORS AND COMPONENTS THEREOF AND PRODUCTS CONTAINING SAME**	**Investigation No. 337-TA-650**

NOTICE OF COMMISSION DETERMINATION TO REVIEW-IN-PART A FINAL DETERMINATION FINDING A VIOLATION OF SECTION 337; SCHEDULE FOR FILING WRITTEN SUBMISSIONS ON THE ISSUES UNDER REVIEW AND ON REMEDY, THE PUBLIC INTEREST, AND BONDING; EXTENSION OF THE TARGET DATE TO MARCH 17, 2010

AGENCY: U.S. International Trade Commission.

ACTION: Notice.

SUMMARY: Notice is hereby given that the U.S. International Trade Commission has determined to review a portion of the final initial determination ("ID") issued by the presiding administrative law judge ("ALJ") on October 13, 2009, finding a violation of section 337 and to request briefing on the issues under review and on remedy, the public interest, and bonding. The Commission has also determined to extend the target date in the above-identified investigation to March 17, 2010.

FOR FURTHER INFORMATION CONTACT: Daniel E. Valencia, Office of the General Counsel, U.S. International Trade Commission, 500 E Street, S.W., Washington, D.C. 20436, telephone (202) 205-1999. Copies of non-confidential documents filed in connection with this investigation are or will be available for inspection during official business hours (8:45 a.m. to 5:15 p.m.) in the Office of the Secretary, U.S. International Trade Commission, 500 E Street, S.W., Washington, D.C. 20436, telephone (202) 205-2000. General information concerning the Commission may also be obtained by accessing its Internet server at *http://www.usitc.gov*. The public record for this investigation may be viewed on the Commission's electronic docket (EDIS) at *http://edis.usitc.gov*. Hearing-impaired persons are advised that information on this matter can be obtained by contacting the Commission's TDD terminal on (202) 205-1810.

SUPPLEMENTARY INFORMATION: The Commission instituted this investigation on May 30, 2008, based on a complaint filed by John Mezzalingua Associates, Inc. d/b/a PPC, Inc. of East Syracuse, New York ("PPC"). 73 *Fed. Reg.* 31145 (May 30, 2008). The complaint alleged violations of section 337 of the Tariff Act of 1930 (19 U.S.C. § 1337) in the importation into the United States, the sale for importation, and the sale within the United States after importation of certain coaxial cable connectors and components thereof and products containing the same by

reason of infringement of U.S. Patent Nos. 5,470,257 ("the '257 patent"); D440,539 ("the '539 patent"); 6,558,194 ("the '194 patent"); and D519,076 ("the '076 patent"). The complaint named eight respondents. After institution, two respondents were terminated from the investigation based on consent orders, and the following four respondents were found in default: Hanjiang Fei Yu Electronics Equipment Factory of China; Zhongguang Electronics of China; Yangzhou Zhongguang Electronics Co. of China; and Yangzhou Zhongguang Foreign Trade Co. Ltd. of China (collectively, "defaulting respondents"). The only respondents actively remaining in this investigation are Fu-Ching Technical Industry Co., Ltd. of Taiwan ("Fu-Ching") and Gem Electronics, Inc. of Windsor, Connecticut ("Gem") (collectively, "active respondents").

On October 13, 2009, the ALJ issued his final ID finding, based on substantial, reliable, and probative evidence, that the defaulting respondents violated section 337 in the importation into the United States, the sale for importation, and the sale within the United States after importation of certain coaxial cable connectors and components thereof and products containing the same by reason of infringement of the '257, '539, '076, and '194 patents. The ALJ found that the active respondents have not violated section 337. Along with the ID, the ALJ issued a recommended determination on remedy and bonding ("RD"). The Commission investigative attorney ("IA") and complainant PPC filed petitions for review of the ID on October 30, 2009. The active respondents filed a contingent petition for review of the ID on October 30, 2009. The IA, the active respondents, and PPC each filed responses to the petitions for review on November 9, 2009.

Having examined the record of this investigation, including the ALJ's final ID, the petitions for review, and the responses thereto, the Commission has determined to review the final ID in part. In particular, the Commission has determined to review (1) the findings and conclusions relating to whether a violation of section 337 has occurred with respect to the '257 patent, including the issues of claim construction, infringement, validity, and domestic industry and (2) the ID's finding that PPC has met the domestic industry requirement for the '539 patent.

The parties are requested to brief their positions on the issues under review with reference to the applicable law and the evidentiary record. In connection with its review, the Commission is particularly interested in responses to the following:

(1) With regard to the claim term "fastener means" in claim 1 of the '257 patent, do the inner circular shoulder 42 and the circular groove 44 shown in the '257 patent "attach said end connector to said system component," as claimed?

(2) Is there evidence in the record that the structure of the disclosed "fastener means" is important to the invention of claim 1 of the '257 patent? *See IMS Tech., Inc. v. Haas Automation, Inc.*, 206 F.3d 1422 (Fed. Cir. 2000).

(3) What are the proper legal principles for determining whether an alleged equivalent performs a claimed function of a means-plus-function limitation in substantially the same way as the corresponding structure disclosed in the patent? Do male and female BNC

connectors, male and female RCA connectors, and female F-connectors perform the attachment function in substantially the same way as the cylindrical internally threaded structure of the "fastener means" of the '257 patent?

(4) With respect to the claim term "engagement means" in claim 1 of the '257 patent, please explain how the corresponding structure "accommodate[s] ***limited*** axial movement of said locking member relative to said connector body ***between said first position and a second position***?"

(5) Does the second shoulder 50b shown and described in the '257 patent perform part of the claimed function of "accomodat[ing] limited axial movement . . . ?"

(6) If the second shoulder 50b is part of the corresponding structure, how does this affect the ALJ's findings on the issues of infringement, validity, and domestic industry with respect to the '257 patent?

(7) Does the normal intended use of the accused connectors of the active respondents involve separation of the locking member from the connector body? In the context of your answer, please explain your position on whether the accused connectors infringe claim 1 of the '257 patent.

(8) With regard to the domestic industry requirement, please cite any evidence in the record that would indicate that, with respect to the Arris Digicon S connector found by the ALJ to practice the '539 patent, there is in the United States "substantial investment in plant and equipment" under 19 U.S.C. §1337(a)(3)(A) or "significant employment of labor or capital" under 19 U.S.C. § 1337(a)(3)(B).

(9) Please cite evidence in the record that PPC has or has not made a "substantial investment in . . .exploitation" of the '539 patent? In your discussion of "investment in . . . exploitation" of the '539 patent, please separately address engineering activities, research and development activities, and licensing activities. With respect to investments in licensing, please identify and describe those investments and activities that pre-date litigation from those that are related to, or post-date litigation.

The parties and members of the public are also asked to comment on the interpretation of section 337(a)(3) as it pertains to licensing.

(10) The statute provides, in part, that "an industry in the United States shall be considered to exist if there is in the United States, with respect to the articles protected by patent, copyright, trademark, or mask work concerned . . . (C) substantial investment in its exploitation, including engineering, research and development, or licensing." In determining whether "investment" in "licensing" is "substantial," is all spending in connection with licensing efforts by an intellectual property owner are properly considered "investment" and, if so, do some kinds of spending in connection with

licensing efforts merit full weight in the Commission's analysis of whether total investment is "substantial" while others merit less weight?

(A) Does Congress's use of the term "exploitation" in section 337(a)(3)(C) require the Commission to give greater weight to licensing efforts directed to bringing the protected article to market as opposed to, for example, efforts seeking to require an existing producer to take a license for a product it already makes? Is it significant that Congress grouped "licensing" with "engineering" and "research and development" in describing exploitation in section 337(a)(3)(C)?

(B) To what extent do legal fees paid by an intellectual property rights holder in litigation with targeted licensees and/or infringers represent investments in the exploitation of an intellectual property right within the meaning of section 337(a)(3)(C)?

In connection with the final disposition of this investigation, the Commission may (1) issue an order that could result in the exclusion of the subject articles from entry into the United States, and/or (2) issue one or more cease and desist orders that could result in the respondent(s) being required to cease and desist from engaging in unfair acts in the importation and sale of such articles. Accordingly, the Commission is interested in receiving written submissions that address the form of remedy, if any, that should be ordered. If a party seeks exclusion of an article from entry into the United States for purposes other than entry for consumption, the party should so indicate and provide information establishing that activities involving other types of entry either are adversely affecting it or likely to do so. For background, *see In the Matter of Certain Devices for Connecting Computers via Telephone Lines*, Inv. No. 337-TA-360, USITC Pub. No. 2843 (December 1994) (Commission Opinion).

If the Commission contemplates some form of remedy, it must consider the effects of that remedy upon the public interest. The factors the Commission will consider include the effect that an exclusion order and/or cease and desist orders would have on (1) the public health and welfare, (2) competitive conditions in the U.S. economy, (3) U.S. production of articles that are like or directly competitive with those that are subject to investigation, and (4) U.S. consumers. The Commission is therefore interested in receiving written submissions that address the aforementioned public interest factors in the context of this investigation.

If the Commission orders some form of remedy, the U.S. Trade Representative, as delegated by the President, has 60 days to approve or disapprove the Commission's action. *See* Presidential Memorandum of July 21, 2005, 70 *Fed. Reg.* 43251 (July 26, 2005). During this period, the subject articles would be entitled to enter the United States under bond, in an amount determined by the Commission and prescribed by the Secretary of the Treasury. The Commission is therefore interested in receiving submissions concerning the amount of the bond that should be imposed if a remedy is ordered.

WRITTEN SUBMISSIONS: The parties to the investigation are requested to file written submissions on the issues identified in this notice. Parties to the investigation and members of the public are invited to file written submissions addressing questions (10), (A), and (B) set forth above regarding the domestic industry requirement of section 337(a)(3)(C). Parties to the investigation, interested government agencies, and any other interested parties are encouraged to file written submissions on the issues of remedy, the public interest, and bonding. Such submissions should address the ALJ's recommendation on remedy and bonding set forth in the RD. Complainants and the IA are also requested to submit proposed remedial orders for the Commission's consideration. Complainants are also requested to state the dates that the patents at issue expire and the HTSUS numbers under which the accused products are imported. The written submissions and proposed remedial orders must be filed no later than close of business on Wednesday, January 13, 2010. Reply submissions must be filed no later than the close of business on Wednesday, January 27, 2010. No further submissions on these issues will be permitted unless otherwise ordered by the Commission.

Persons filing written submissions must file the original document and 12 true copies thereof on or before the deadlines stated above with the Office of the Secretary. Any person desiring to submit a document to the Commission in confidence must request confidential treatment unless the information has already been granted such treatment during the proceedings. All such requests should be directed to the Secretary of the Commission and must include a full statement of the reasons why the Commission should grant such treatment. *See* 19 C.F.R. § 210.6. Documents for which confidential treatment by the Commission is sought will be treated accordingly. All nonconfidential written submissions will be available for public inspection at the Office of the Secretary.

TARGET DATE: The target date is extended from February 15, 2010 to March 17, 2010.

The authority for the Commission's determination is contained in section 337 of the Tariff Act of 1930, as amended (19 U.S.C. § 1337), and in sections 210.42-46 and 210.50 of the Commission's Rules of Practice and Procedure (19 C.F.R. §§ 210.42-46 and 210.50).

By order of the Commission.

Marilyn R. Abbott
Secretary to the Commission

Issued: December 14, 2009

CERTAIN COAXIAL CABLE CONNECTORS AND COMPONENTS THEREOF AND PRODUCTS CONTAINING SAME **337-TA-650**

CERTIFICATE OF SERVICE

I, Marilyn R. Abbott, hereby certify that the attached **NOTICE OF COMMISSION DETERMINATION TO REVIEW-IN-PART A FINAL DETERMINATION FINDING A VIOLATION OF SECTION 337; SCHEDULE FOR FILING WRITTEN SUBMISSIONS ON THE ISSUES UNDER REVIEW AND ON REMEDY, THE PUBLIC INTEREST, AND BONDING** has been served by hand upon the Commission Investigative Attorney, Kevin Baer, Esq., and the following parties as indicated on December 14, 2009.

Marilyn R. Abbott, Secretary
U.S. International Trade Commission
500 E Street, SW
Washington, DC 20436

On Behalf of Complainant John Mezzalingua Associates, Inc.:

Patrick D. Gill, Esq.
RODE & QUALEY
55 W. 39th Street
New York, NY 10018

( ) Via Hand Delivery
( ) Via Overnight Mail
(X) Via First Class Mail
( ) Other: _____

On Behalf of Respondents GEM Electronics AND Fu Ching Technical Industry Co., LTD.:

John R. Horvack, Jr., Esq.
CARMODY & TORRANCE, LLP
195 Church Street
New Haven, CT 06509

( ) Via Hand Delivery
( ) Via Overnight Mail
(X) Via First Class Mail
( ) Other: _____

PUBLIC VERSION

UNITED STATES INTERNATIONAL TRADE COMMISSION
Washington, D.C.

In the Matter of

CERTAIN COAXIAL CABLE CONNECTORS AND COMPONENTS THEREOF AND PRODUCTS CONTAINING SAME

Inv. No. 337-TA-650

INITIAL DETERMINATION ON VIOLATION OF SECTION 337 AND RECOMMENDED DETERMINATION ON REMEDY AND BOND

Administrative Law Judge E. James Gildea

(October 13, 2009)

Appearances:
For the Complainant John Mezzalingua Associates, Inc., d/b/a PPC, Inc.

James R. Muldoon, Esq.; Denis J. Sullivan, Esq.; and Thomas Hoehner, Esq. of Majarma Muldoon Blasiak & Sullivan LLP of Syracuse, N.Y.

John F. Sweeney, Esq. of Locke Lord Bissell & Liddell LLP of New York, N.Y.

James Hwa, Esq. of Locke Lord Bissell & Liddell LLP of Washington, D.C.

Patrick D. Gill, Esq.; and R. Brian Burke, Esq. of Rode & Qualey, New York, N.Y.

For the Respondents Fu Ching Technical Industry Co., Ltd. and Gem Electronics, Inc.:

John R. Horvack, Jr., Esq.; and Sherwin M. Yoder, Esq. of Carmody & Torrance LLP of New Haven, C.T.

For the Commission Investigative Staff:
Lynn I. Levine, Esq., Director; T. Spence Chubb, Esq., Supervisory Attorney; Kevin Baer, Esq., Investigative Attorney, of the Office of Unfair Import Investigations, U.S. International Trade Commission, of Washington, D.C.

PUBLIC VERSION

Pursuant to the Notice of Investigation, 73 Fed. Reg. 31145 (2008), this is the Initial Determination of the Investigation in the Matter of Certain Coaxial Cable Connectors and Components Thereof and Products Containing Same, United States International Trade Commission Investigation No. 337-TA-650. *See* 19 C.F.R. § 210.42(a).

With respect to defaulting Respondents Hanjiang Fei Yu Electronics Equipment Factory, Zhongguang Electronics,[1] Yangzhou Zhongguang Electronics Co., Ltd., and Yangzhou Zhongguang Foreign Trade Co., Ltd., it is held that a violation of Section 337 of the Tariff Act of 1930, as amended (19 U.S.C. § 1337), has occurred in the importation into the United States, the sale for importation, or the sale within the United States after importation, of certain coaxial cable connectors by reason of infringement of one or more of claims 1 and 2 of United States Patent No. 6,558,194. It is further held that a violation of Section 337 of the Tariff Act of 1930, as amended, has occurred in the importation into the United States, the sale for importation, or the sale within the United States after importation, of certain coaxial cable connectors by reason of infringement of one or more of claims 1 and 5 of United States Patent No. 5,470,257. It is further held that a violation of Section 337 of the Tariff Act of 1930, as amended, has occurred in the importation into the United States, the sale for importation, or the sale within the United States after importation, of certain coaxial cable connectors by reason of infringement of the sole claim of United States Patent No. D440,539. It is further held that a violation of Section 337 of the Tariff Act of 1930, as amended, has occurred in the importation into the United States, the sale for importation, or the sale within the United States after importation, of certain coaxial cable connectors by reason of infringement of the sole claim of United States Patent No. D519,076.

---

[1] With respect to Respondent Zhongguang Electronics the violations are solely pursuant to the presumptions noted in Commission Rule 210.16(c)(1).

With respect to Respondents Fu Ching Technical Industrial Co., Ltd. and Gem Electronics, it held that no violation of Section 337 of the Tariff Act of 1930, as amended, has occurred in the importation into the United States, the sale for importation, or the sale within the United States after importation, of certain coaxial cable connectors by reason of infringement of one or more of claims 1 and 5 of United States Patent No. 5,470,257.

TABLE OF CONTENTS

INITIAL DETERMINATION ON VIOLATION OF SECTION 337 AND RECOMMENDED DETERMINATION ON REMEDY AND BOND iv
I. BACKGROUND. 1
A. Institution and Procedural History of this Investigation. 1
B. The Parties. 4
1. Complainant John Mezzalingua Associates, Inc., d/b/a PPC, Inc. 4
2. Respondent Gem Electronics. 4
3. Respondent Fu Ching Technical Industrial Co., Ltd. 4
4. Respondent Aska Communication Corp. 5
5. Respondent Edali Industrial Corp. 5
6. The Fei Yu Respondents 5
C. Overview of the Technology. 6
D. The Patents at Issue. 6
1. U.S. Patent No. 6,558,194. 6
2. U.S. Patent No. 5,470,257. 9
3. U.S. Patent No. D440,539. 12
4. U.S. Patent No. D519,076. 13
E. The Products at Issue. 14
II. JURISDICTION AND IMPORTATION. 17
III. CLAIM CONSTRUCTION 21
A. Applicable Law 21
1. Utility Patents. 21
Means-Plus-Function Claims. **24**
2. Design Patents. 26
B. Level of Skill in the Art. 26
C. The Disputed Claim Terms of the '194 Patent and Their Proper Construction 27
D. The Disputed Claim Terms of the '257 Patent and Their Proper Construction 27
1. Claim 1, Portion of Element 'a'—"*an outer collar surrounding and fixed relative to said inner post*" 28
2. Claim 1, Portions of Element 'b' –"*fastener means . . . for attaching said end connector to said system component*" 29
3. Claim 1, Portion of Element 'd' – "*engagement means circumscribing the interior of said outer collar and the exterior of said locking member, said engagement means coacting in circular interengagement to inseparably couple said locking member to said connector body at a first position*" 34
a) Portion of Element 'd' — "inseparably couple" 38
E. The Disputed Claim Terms of the '539 Patent and Their Proper Construction 49
F. The Disputed Claim Terms of the '076 Patent and Their Proper Construction 49
IV. INFRINGEMENT DETERMINATION 49
A. Applicable Law 49
1. Utility Patents. 49
Means-Plus-Function Claims. 50
2. Design Patents. 50
B. Analysis of the Accused Fei Yu '194 Connectors with Respect to the '194 Patent. 51
1. Claim 1 51
2. Claim 2 54
C. Analysis of the Accused Fu Ching and Fei Yu '257 Connectors with Respect to the '257 Patent. 56
1. Claim 1. 57

a) Literal Infringement, Respondents. 57
b) Literal Infringement, Defaulting Respondents. 77
2. Claim 5 – *"The end connector of claim 1 wherein said annular chamber is closed at a first end by a circular flange extending radially between said inner post and said outer collar."* 82
D. Analysis of the Accused Fei Yu Model 043 with Respect to the '539 Patent. 83
E. Analysis of the Accused Fei Yu 039B Connector with Respect to the '076 Patent. 85
V. VALIDITY 85
A. Background 85
B. Anticipation. 86
The Nikitas Reference. 87
C. Obviousness. 88
The Nikitas, Baker, and Samchisen References. 91
VI. ENFORCEABILITY/PATENT MISUSE 94
VII. EQUITABLE ESTOPPEL 96
VIII. WAIVER OR WITHDRAWAL OF RESPONDENTS' OTHER DEFENSES. 100
IX. DOMESTIC INDUSTRY 101
A. Technical Analysis 102
1. '194 Patent. 103
2. '257 Patent. 105
3. '539 Patent. 108
4. '076 Patent. 111
B. Economic Analysis 111
1. '194 Patent. 111
2. '257 Patent. 111
3. '539 Patent. 111
4. '076 Patent. 114
X. CONCLUSIONS OF LAW 115
XI. INITIAL DETERMINATION AND ORDER 116
RECOMMENDED DETERMINATION ON REMEDY AND BOND 118
I. REMEDY AND BONDING 118
A. Applicable Law 118
1. General Exclusion Order. 118
2. Limited Exclusion Order. 120
B. Remedy with Respect to the '194 Patent. 121
A General Exclusion Order is Necessary to Prevent Circumvention of a Limited Exclusion Order. 121
Pattern of Violation. 124
Difficult to Identify the Source of Infringing Products. 127
C. Remedy with Respect to the '257 Patent. 130
Circumvention of a Limited Exclusion Order. 131
Pattern of Violation, Difficult to Identify the Source of Infringing Products 132
Ariza. 133
Cable Wholesale 133
CablesNMor. 134
Hangzhou Prevail. 135
MonoPrice. 135
Zhejiang Cixi 136
Action Electronics. 136
Paladin 137
CablesToGo.com 137

Cansky. 138
ComputerCableStore.com. 138
MCM Electronics. 139
Summit Source. 139
Tessco. 140
Difficult to Identify the Source of Infringing Products. 141
D. Remedy with Respect to the '539 Patent. 142
E. Remedy with Respect to the '076 Patent. 143
Circumvention of a Limited Exclusion Order. 144
Pattern of Violation of Section 337, Difficult to Identify the Source of Infringing Products. 144
II. CEASE AND DESIST ORDER 148
III. BOND DURING PRESIDENTIAL REVIEW PERIOD 149
IV. CONCLUSION 151

PUBLIC VERSION

The following abbreviations may be used in this Initial Determination:

JX	Joint Exhibit
CX	Complainant's exhibit
CDX	Complainant's demonstrative exhibit
CPX	Complainant's physical exhibit
CFF	Complainant's proposed findings of fact
CCL	Complainant's proposed conclusions of law
CBr.	Complainants' initial post-hearing brief
CORFF	Complainant's objections to Respondents' proposed findings of fact
COSFF	Complainant's objections to Staff's proposed findings of fact
CRBr.	Complainant's reply post-hearing brief
RX	Respondents' exhibit
RDX	Respondents' demonstrative exhibit
RPX	Respondents' physical exhibit
RFF	Respondents' proposed findings of fact
RCL	Respondents' proposed conclusions of law
RBr.	Respondents' initial post-hearing brief
ROCFF	Respondents' objections to Complainant's proposed findings of fact
ROSFF	Respondents' objections to Staff's proposed findings of fact
RRBr.	Respondents' reply post-hearing brief
SFF	Staff's proposed findings of fact
SCL	Staff's proposed conclusions of law
SBr.	Staff's initial post-hearing brief
SOCFF	Staff's objections to Complainant's proposed findings of fact
SORFF	Staff's objections to Respondents' proposed findings of fact
SRBr.	Staff's reply post-hearing brief
Tr.	Hearing transcript

I. BACKGROUND.

A. Institution and Procedural History of this Investigation.

By publication of a Notice of Investigation in the *Federal Register* on May 30, 2008, pursuant to subsection (b) of Section 337 of the Tariff Act of 1930, as amended, the Commission instituted Investigation No. 337-TA-650 with respect to U.S. Patent No. 6,558,194 (the "'194 patent"), U.S. Patent No. 5,470,257 (the "'257 patent"), U.S. Patent No. D440,539 (the "'539 patent") and U.S. Patent No. D519,076 (the "'076 patent") to determine the following:

> whether there is a violation of subsection (a)(1)(B) of section 337 in the importation into the United States, the sale for importation, or the sale within the United States after importation of certain coaxial cable connectors or components thereof or products containing same that infringe one or more of claims 1 and 2 of U.S. Patent No. 6,558,194; claims 1–5 and 10 of U.S. Patent No. 5,470,257; the claim of U.S. Patent No. D440,539; and the claim of U.S. Patent No. D519,076; and whether an industry in the United States exists as required by subsection (a)(2) of section 337[.]

73 Fed. Reg. 31145 (2008).

John Mezzalingua Associates, Inc., d/b/a PPC, Inc. ("PPC") of East Syracuse, New York, is named in the Notice of Investigation as the Complainant. *Id.* The Respondents named in the Notice of Investigation were: Aska Communication Corp., Edali Industrial Corp., Fu Ching Technical Industrial Co., Ltd., Gem Electronics, Hanjiang Fei Yu Electronics Equipment Factory, Zhongguang Electronics, Yangzhou Zhongguang Electronics Co., Ltd., and Yangzhou Zhongguang Foreign Trade Co., Ltd. *Id.* The Commission Investigative Staff of the Commission's Office of Unfair Import Investigations is also a party in this Investigation. *Id.* The Investigation was originally assigned to Administrative Law Judge Bullock. *Id.*

On July 29, 2008, Administrative Law Judge Bullock issued an Initial Determination Granting Respondent Edali's Motion for Termination Based on Consent Order. (*See* Order No.

5.) The Commission determined not to review the order. (*See* Notice of Commission Decision Not to Review an Initial Determination Terminating the Investigation with Respect to Respondent Edali Industrial Corp. Based on a Consent Order (August 19, 2008).)

On August 27, 2008, Administrative Law Judge Bullock issued an Initial Determination Granting Respondent Aska's Motion for Termination Based on Consent Order. (*See* Order No. 6.) The Commission determined not to review the order. (*See* Notice of Commission Decision Not to Review an Initial Determination Terminating the Investigation with Respect to Respondent Aska Communication Corp. Based on a Consent Order (September 17, 2008).)

On September 22, 2008, Administrative Law Judge Bullock issued an Initial Determination Finding Four Respondents in Default: Hanjiang Fei Yu Electronics Equipment Factory, Zhongguang Electronics, Yangzhou Zhongguang Electronics Co., Ltd., and Yangzhou Zhongguang Foreign Trade Co., Ltd. (*See* Order No. 8.) The Commission determined not to review the order. (*See* Notice of Commission Decision Not to Review an Initial Determination Finding Four Respondents in Default (October 9, 2008).)

On December 8, 2008, the Investigation was permanently reassigned to Administrative Law Judge Gildea. (*See* Notice to the Parties (December 8, 2008).)

On December 12, 2008, Administrative Law Judge Gildea issued an Initial Determination extending the Investigation target date from August 31, 2009, to February 15, 2010. (*See* Order No. 11.) The Commission determined not to review the order extending the Investigation target date to February 15, 2010. (*See* Notice of Commission Decision Not to Review an Initial Determination Extending the Target Date (January 8, 2009).)

On April 6, 2009, Administrative Law Judge Gildea issued an Initial Determination Granting in Part Complainant's Motion for Summary Determination of Violations of Section 337

and Remedy with Respect to the '257 Patent Infringed by Respondents Fu Ching Technical Industry Co. Ltd., Gem Electronics, and Defaulting Respondents. (*See* Order No. 18.) Specifically, Administrative Law Judge Gildea found that Complainant John Mezzalingua Associates, Inc. d/b/a PPC, Inc. had established that, with respect to U.S. Patent No. 5,470,257, the sale for importation into the United States, and importation and sale in the United States of the accused products by respondents satisfied the importation standard of Section 337. (*Id.* at 5.) Administrative Law Judge Gildea further found, with respect to U.S. Patent No. 5,470,257, that Complainant had satisfied the economic prong of the domestic industry requirement of Section 337. (*Id.* at 6.) The Commission determined not to review the order. (*See* Notice of Commission Decision Not to Review an Initial Determination Granting-in-Part a Motion for Summary Determination (April 28, 2009).)

On June 3, 2009, Administrative Law Judge Gildea issued an Initial Determination Granting in Part Complainant's Motion for Summary Determination of Violation of Section 337 with Respect to the '194 and '076 Patents. (*See* Order No. 22.) Specifically, Administrative Law Judge Gildea found that Complainant's motion should be granted in part with respect to (i) Respondents Fei Yu, Yangzhou FTC, and Yangzhou ZE's sale for importation of Fei Yu model nos. FY039A, FY039B, FY037, FY038, FY039, FY040B, FY041, FY043 and FY047 accused of infringing U.S. Patent Nos. D519,076 and 6,558,194; (ii) the infringement of U.S. Patent No. D519,076 by Fei Yu Model 039B; (iii) the presence of a technical domestic industry with respect to U.S. Patent No. D519,076; and (iv) the presence of an economic domestic industry with respect to U.S. Patent Nos. D519,076 and 6,558,194. (*Id.* at 15-16.) The Commission determined not to review the order. (*See* Notice of Commission Decision Not to Review an Initial Determination Granting-in-Part a Motion for Summary Determination (June 25, 2009).)

The evidentiary hearing on the question of violation of Section 337 began on July 6, 2009, and ended on July 14, 2009. Respondent Gem Electronics ("Gem") and Respondent Fu Ching Technical Industrial Co., Ltd. ("Fu Ching") (collectively, "Respondents"); Complainant John Mezzalingua Associates, Inc., d/b/a PPC, Inc. ("PPC"); and Commission Investigative Staff ("Staff"), were represented by counsel at the hearing. (Hearing Tr. at 94-96.)

B. The Parties.

1. Complainant John Mezzalingua Associates, Inc., d/b/a PPC, Inc.

PPC is a privately held Delaware Corporation doing business under the name "PPC," with its principal place of business in East Syracuse, New York. (CBr. at 5.) PPC designs, develops, tests, manufactures, licenses, and markets coaxial cable connectors for use in telecommunications, satellite and cable television industries. (Verified Complaint Under Section 337 of the Tariff Act of 1930 as Amended, filed April 28, 2009 ("Complaint") at 3-4.)

2. Respondent Gem Electronics.

Gem is a private company with a principal place of business Windsor, Connecticut. (RBr. at 3.) Gem is allegedly engaged in the importation into the United States and sale after importation of coaxial cable connectors that infringe certain claims of the '257 patent. (Complaint at 6.) According to Gem, it has imported the accused coaxial cable connectors since early 2002. (RBr. at 3.)

3. Respondent Fu Ching Technical Industrial Co., Ltd.

Fu Ching is a private company with a principal place of business in Taipei, Taiwan. (RBr. at 3.) Fu Ching is allegedly engaged in the manufacture and sale for importation into the United States of coaxial cable connectors that infringe the '257 patent. (Complaint at 5.) According to

Fu Ching, it "has been manufacturing and selling the accused F connectors since 2000, and the accused BNC and RCA connectors since 2001." (RBr. at 3.)

4. Respondent Aska Communication Corp.

Respondent Aska Communication Corp. ("Aska") was terminated from the Investigation based on a consent order. (*See* Section I.A. above.)

5. Respondent Edali Industrial Corp.

Respondent Edali Industrial Corp. ("Edali") was terminated from the Investigation based on a consent order. (*See* Section I.A. above.)

6. The Fei Yu Respondents

Respondents Hanjiang Fei Yu Electronics Equipment Factory ("Fei Yu"), Zhongguang Electronics ("ZE"), Yangzhou Zhongguang Electronics Co., Ltd. ("Yangzhou ZE"), and Yangzhou Zhongguang Foreign Trade Co., Ltd. ("Yangzhou FTC") (collectively, "Defaulting Respondents") were found to be in default. (*See* Order No. 8.) Fei Yu is allegedly "a company organized and existing under the laws of China with its principal place of business at No. 1 East Hongxing Road, Hongqiao Street, [T]ouqiao Town, Hanjiang District, Yangzhou, Jiangsu Province, China." (Complaint at 4.) Fei Yu is allegedly engaged in the manufacture and sale for importation into the United States of coaxial cable connectors that infringe certain claims of the '194, '257, '539, and '076 patents. (*Id.* at 4-5.) Fei Yu allegedly "sells infringing [coaxial cable] connectors for importation into the United States under the following names: Zhongguang Electronics, Yangzhou Zhongguang Electronics Co., Ltd., and Yangzhou Zhongguang Foreign Trade Co., Ltd." (*Id.* at 5.)

C. Overview of the Technology.

The products at issue are "drop" coaxial cable connectors used in the telecommunications, satellite and cable television industries. (CBr. at 6; Complaint at 7.) Drop connectors are "small, generally cylindrical devices that mechanically and electrically connect to both the coaxial cable and the port of an electrical device to provide a reliable electrical connection between the cable and the device." (CBr. at 6-7.) These coaxial cable connectors are frequently used outdoors, and "must provide a reliable pathway with minimum signal loss, protect against moisture, shield against RF leakage, have simple installation procedures and work properly with existing tooling equipment. (*Id.* at 7; Complaint at 7.)

D. The Patents at Issue.

1. U.S. Patent No. 6,558,194.

This Investigation concerns U.S. Patent No. 6,558,194 (the "'194 patent"), entitled "Connector and Method of Operation," which resulted from a continuation application claiming priority to U.S. Patent Application No. 08/910,509, filed on August 2, 1997. (*See* CX-2 at PPC-TRIAL-000042.) The '194 patent was filed on July 21, 2000, and issued on May 6, 2003. (*Id.*) The '194 patent names Noah P. Montena as the inventor. (*Id.*) The '194 patent was assigned to PPC. (*Id.*)

The '194 patent discloses a one-piece compression-type coaxial cable drop connector. (Complaint at 8.) The '194 patent discloses a fastener member (28)[2] on the connector (10) that may be advanced or moved axially from a pre-installed first position into a second configuration after a prepared cable (12) has been inserted into the connector (10). (*See, e.g.*, CX-2 at 8:32-60, Figs. 1, 5.)

[2] This is also referred to as a compression ring. (CX-2 at 7:40.)

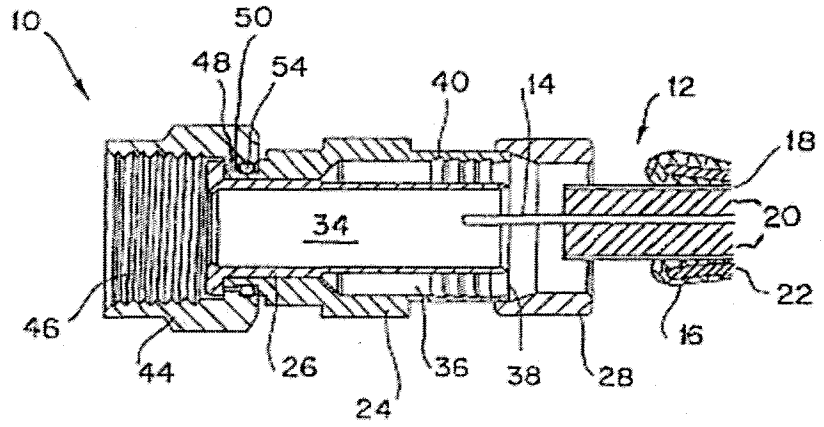

Fig. 1

(*Id.* at Fig. 1.) When the fastener member has been moved into the second configuration, the connector body (24) is concentrically gripped, essentially causing the outer portion of the cable to be firmly gripped or clamped. (*Id.* at 8:32-60.)

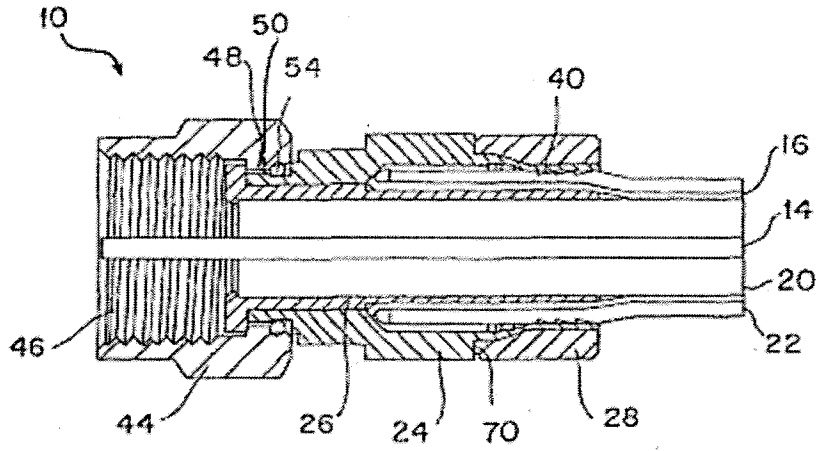

Fig. 5

(*Id.* at Fig. 5.)

The '194 patent has two claims, both of which are independent. Claims 1 and 2 read as follows:

> **1.** A connector for coupling an end of a coaxial cable to a threaded port, the coaxial cable having a center conductor surrounded by a dielectric, the dielectric being surrounded by a conductive grounding sheath, and the conductive grounding sheath being surrounded by a protective outer jacket, said connector comprising:
>
> a. a tubular post having a first end adapted to be inserted into an exposed end of the coaxial cable around the dielectric thereof and under the conductive grounding sheath thereof, said tubular post having an opposing second end;
>
> b. a nut having a first end for rotatably engaging the second end of said tubular post and having an opposing second end with an internally threaded bore for threadedly engaging the threaded port;
>
> c. a cylindrical body member having a first end and a second end, the first end of said cylindrical body member including a cylindrical sleeve having an outer wall of a first diameter and an inner wall, the inner wall bounding a first central bore extending about said tubular post, the second end of said cylindrical body member engaging said tubular post proximate the second end thereof, said cylindrical sleeve having an open rear end portion for receiving the outer jacket of the coaxial cable, said open rear end portion being deformable;
>
> d. a compression ring having first and second opposing ends and having a central passageway extending therethrough between the first and second ends thereof, the first end of said compression ring having a first non-tapered internal bore of a diameter commensurate with the first diameter of the outer wall of said cylindrical sleeve for allowing the first end of said compression ring to extend over the first end of said cylindrical body member, the central passageway of said compression ring including an inwardly tapered annular wall leading from the first internal bore and narrowing to a reduced diameter as compared with the first diameter; and
>
> e. said inwardly tapered annular wall causing said rear end portion of said cylindrical sleeve to be deformed inwardly toward said tubular post and against the jacket of the coaxial cable as said compression ring is advanced axially over the cylindrical body member toward the second end of said cylindrical body member.
>
> **2.** A connector for coupling an end of a coaxial cable to a threaded port, the coaxial cable having a center conductor surrounded by a dielectric, the dielectric being surrounded by a conductive grounding sheath, and the conductive grounding sheath being surrounded by a protective outer jacket, said connector comprising:

a. a tubular post having a first end adapted to be inserted into an exposed end of the coaxial cable around the dielectric thereof and under the conductive grounding sheath thereof, said tubular post having an opposing second end;

b. a nut having a first end for rotatably engaging the second end of said tubular post and having an opposing second end with an internally threaded bore for threadedly engaging the threaded port;

c. a cylindrical body member having a first end and a second end, the first end of said cylindrical body member including a cylindrical sleeve having an outer wall of a first diameter and an inner wall, the inner wall bounding a first central bore extending about said tubular post, the second end[3] of said cylindrical body member engaging said tubular post proximate the second end thereof, said cylindrical sleeve having an open rear end portion for receiving the outer jacket of the coaxial cable, said open rear end portion being deformable;

d. a compression ring having first and second opposing ends and having a central passageway extending therethrough between the first and second ends thereof, the first end of said compression ring having a first constant diameter internal bore of a diameter commensurate with the first diameter of the outer wall of said cylindrical sleeve for allowing the first end of said compression ring to extend over the first end of said cylindrical body member, the central passageway of said compression ring including an inwardly tapered annular wall leading from the first internal bore and narrowing to a reduced diameter as compared with the first diameter; and

e. said inwardly tapered annular wall causing said rear end portion of said cylindrical sleeve to be deformed inwardly toward said tubular post and against the jacket of the coaxial cable as said compression ring is advanced axially over the cylindrical body member toward the second end of said cylindrical body member.

(CX-2 at PPC-TRIAL-000072.)

2. U.S. Patent No. 5,470,257.

This Investigation also concerns U.S. Patent No. 5,470,257 (the "'257 patent"), entitled "Radial compression type coaxial cable end connector." (*See* JX-1 at 2.) The '257 patent was filed on September 12, 1994 (Application No. 08/304,562), and issued on November 28, 1995. (*Id.*) The '257 patent names Andrew Szegda as the inventor. (*Id.*) The '257 patent was assigned to PPC. (*Id.*; CFF IV.A.2 (undisputed).)

[3] The Certificate of Correction, dated May 6, 2003, replaces the word "send" with "end." (CX-2 at PPC-TRIAL-000073.)

The '257 patent discloses a radial compression type coaxial cable end connector. (JX-1, at Abstract.) The '257 patent discloses a tubular locking member (26) on the connector (10) that may be advanced or moved axially from a pre-installed open (or first) position into a second clamped configuration after a prepared cable (12) has been inserted into the connector (10). (*See, e.g.*, JX-1 at 2:35-47, Figs. 1, 4.)

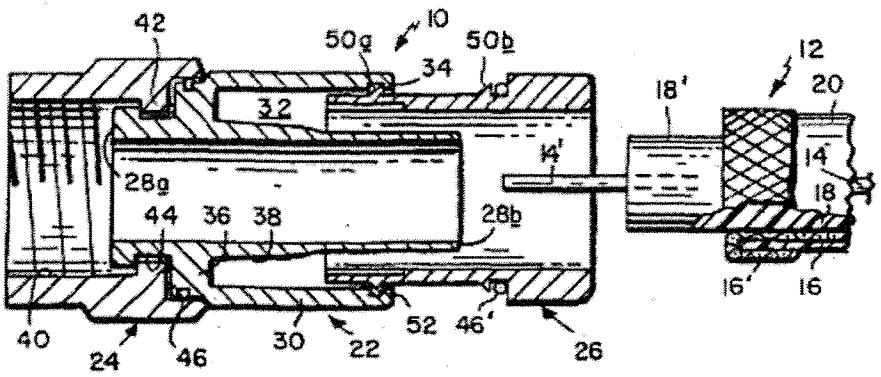

FIG. 1

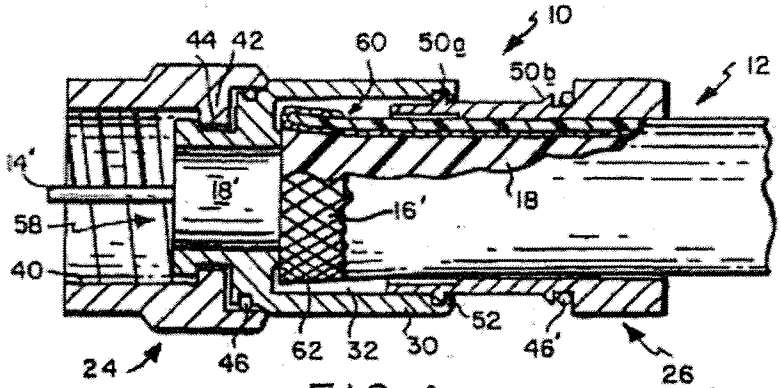

FIG. 4

(JX-1, Figs. 1, 4.) When the locking member has been moved into the second configuration, the locking member "coacts" with the inner post (28) of the connector to firmly clamp the outer annular portion (60) of the cable. (JX-1 at 2:35-47, Fig. 5.)

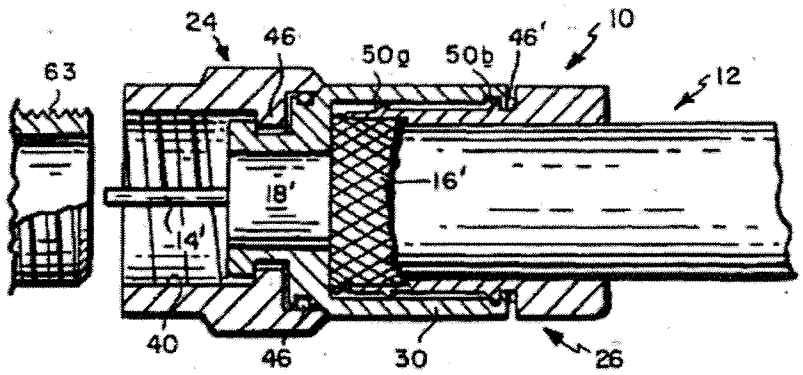

FIG. 5

(JX-1, Fig. 5.)

Claim 1 is the only asserted independent claim in the '257 patent. The remaining claim at issue, claim 5, depends directly from claim 1. Claims 1 and 5 read as follows:

> **1.** An end connector for connecting a coaxial cable to a system component, said end connector comprising:
>
> a connector body comprising a tubular inner post extending from a front end to a rear end, and including an outer collar surrounding and fixed relative to said inner post at a location disposed rearwardly of said front end, said outer collar cooperating in a radially spaced relationship with said inner post to define an annular chamber with a rear opening;
>
> fastener means at the front end of said inner post for attaching said end connector to said system component;
>
> a tubular locking member protruding axially into said annular chamber through said rear opening; and
>
> engagement means circumscribing the interior of said outer collar and the exterior of said locking member, said engagement means coacting in circular interengagement to inseparably couple said locking member to said connector body at a first position and to accommodate limited axial movement of said locking member relative to said connector body between said first position and a second position, said locking member coacting in a first radially spaced relationship with said inner post when in said first position to accommodate insertion of the rear end of said inner post into an end of said cable, with a central core portion of said cable being received in said inner post through said rear end and an outer annular portion of said cable being received in said annular chamber through said rear opening and between said locking member and said inner post, and said locking member coacting in a second radially spaced relationship with said inner post when in said second position to grip the outer annular portion of said cable therebetween.

> **5.** The end connector of claim **1** wherein said annular chamber is closed at a first end by a circular flange extending radially between said inner post and said outer collar.

(JX-1 at 8.)

3. U.S. Patent No. D440,539.

This Investigation also concerns U.S. Patent No. D440,539 (the "'539 patent"), entitled "Closed Compression-Type Coaxial Cable Connector," which resulted from a continuation application claiming priority to U.S. Patent Application No. 08/910,509, filed on August 2, 1997. (*See* CX-3 at PPC-TRIAL-000075.) The '539 patent was filed on April 28, 2000, and issued on April 17, 2001. (*Id.*) The '539 patent names Noah P. Montena as the inventor. (*Id.*) The '539 patent was assigned to, and is currently owned by, PPC. (CX-42 at PPC-TRIAL-001163-68; CFF VII.8 (undisputed).)

There is only one claim in the '539 patent, which reads as follows: "[t]he ornamental design for a closed compression-type coaxial cable connector, as shown and described." (CX-3 at PPC-TRIAL-000075.) The '539 patent discloses four Figures, along with their descriptions. Figure 1 is "a perspective view of a closed compression-type coaxial cable connector according to the present invention." (*Id* at 77.)

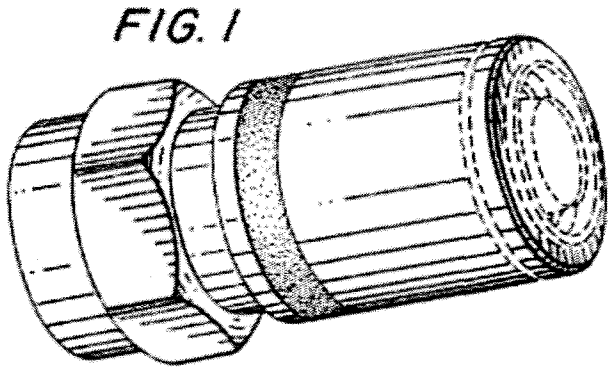

(*Id.*)

4. U.S. Patent No. D519,076.

This Investigation also concerns U.S. Patent No. D519,076 (the "'076 patent"), entitled "Coax Cable Connector." (*See* CX-4 at PPC-TRIAL-000079.) The '076 patent was filed on March 19, 2004, and issued on April 18, 2006. (*Id.*) The '076 patent names Michael Fox as the inventor. (*Id.*) The '076 patent was assigned to PPC. (*Id.*)

There is only one claim in the '076 patent, which reads as follows: "[t]he ornamental design for a coax cable connector, as shown and described." (CX-4 at PPC-TRIAL-000079.) The patent has six figures, with a description identifying the view or perspective of each figure. (*Id.* at Sheets 1-5.) Figure 3 shows the design in a "closed" position, and Figure 5 shows the design in an "open" position. (*Id.* at 79, Figs. 3, 5.)

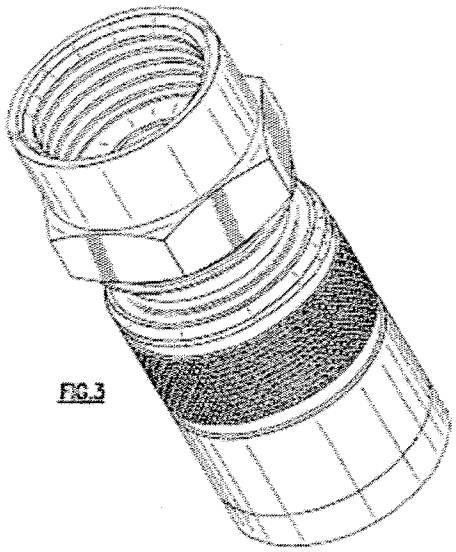

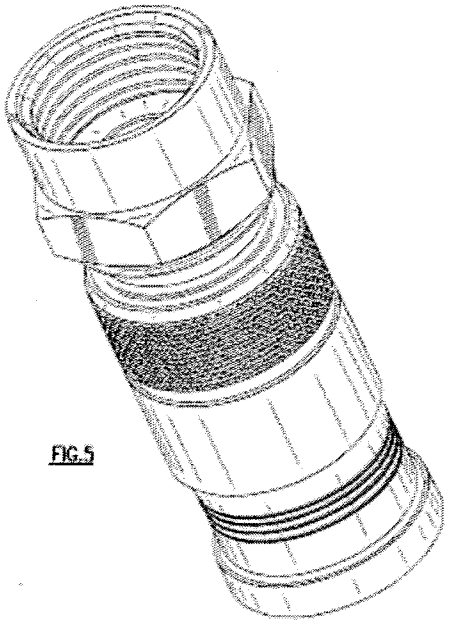

(*Id.*)

The Administrative Law Judge previously found that the "verbal characterization"[4] of the '076 patent by PPC's expert, Dr. Eldering, was undisputed:

> The compression connector has a nut comprising a cylindrical portion and a hexagonal portion. The cylindrical portion of the nut represents approximately fifty percent of the nut, and is followed by a hexagonal portion. The interior surface of the nut is threaded. [There is a] narrow neck behind the hexagonal portion of the nut. [There is a] collar behind the narrow neck. The main body of the collar is generally cylindrical, comprising a forward knurled portion between two narrow grooves and a rear portion that has a smooth surface. [There is a] compression sleeve that has a forward portion of smaller outer diameter that is inserted into the open end of the collar, which is opposite the nut. The forward part of the compression sleeve is cylindrical and has a series of circumferential grooves and ridges on its exterior surface. The rearward portion of the compression sleeve has a flange that has an outer diameter approximately equal to the outer diameter of the collar. In the closed position the compression sleeve is inserted into the collar and the grooves and ridges on the exterior surface of the compression sleeve are no longer visible.

(Order No. 22 at 8.)

E. The Products at Issue.

The products at issue in this Investigation are radial compression coaxial cable connectors. (CBr. at 14.) With respect to infringement of claims 1 and 2 of the '194 patent, PPC accuses Fei Yu Models 037, 039A, 041, and 043 (collectively, the "Fei Yu '194 Connectors"). (*Id.* at 25.) PPC further identifies Respondent Edali's Model FPL-56 as infringing the '194 patent, as well as the products of a number of non-respondents, attempting to establish a widespread pattern of infringement of the '194 patent for the purpose of obtaining a general exclusion order. (*Id.* at 26-27.)

With respect to infringement of claims 1 and 5 of the '257 patent, PPC accuses the following Fu Ching Models (collectively, the "Fu Ching Connectors"):

[4] *Egyptian Goddess, Inc. v. Swisa, Inc.*, 543 F.3d 665, 680 (Fed. Cir. 2008).

Item #	Fu Ching Model No.	Gem Model No.	Fastener Type
1	FM1-710B1	0459-2CS	F Male
2	FM1-710A4	0406-6CS	F Male
3	FM1-710A5	0406-610CS	F Male
4	FM1-710A2	0406-6CSQS	F Male
5	FM1-710A2G	0406-6CSQSG	F Male
6	FM1-710A1	--	F Male
7	FM1-710A1G	--	F Male
8	FM1-710B2		F Male
9	FF1-710B1	0401-2CSTP	F Female
10	FF1-710A4	0401-6CSTP	F Female
11	FF1-710A5	0401-610CSTP	F Female
12	FF1-710A2	0401-6CSQSTP	F Female
13	FF1-710A1	--	F Female
14	FML1-710B1	0407-2CSTP	F Right Angle Male
15	FML1-710A4	0407-6CSTP	F Right Angle Male
16	FML1-710A5	0407-610CSTP	F Right Angle Male
17	FML1-710A2	0407-6CSQSTP	F Right Angle Male
18	FML1-710A1	--	F Right Angle Male
19	BF1-710B1	351-2CSTP	BNC Female
20	BF1-710A4	351-5CSTP	BNC Female
21	BF1-710A5	351-510CSTP	BNC Female
22	BF1-710A2	351-5CSQSTP	BNC Female
23	BF1-710A1	--	BNC Female
24	BF1-710A1G	--	BNC Female
25	BM1-710B1	302-N2CSTP	BNC Male
26	BM1-710A4	302-5CSTP	BNC Male

Item #	Fu Ching Model No.	Gem Model No.	Fastener Type
27	BM1-710A5	302-510CSTP	BNC Male
28	BM1-710A2	302-5CSQSTP	BNC Male
29	BM1-710A2G	302-5CSQSGTP	BNC Male
30	BM1-710C2	302-8240CSTP	BNC Male
31	BM1-710B14	302-8241CSTP	BNC Male
32	BM1-710A1	--	BNC Male
33	BM1-710B2	--	BNC Male
34	BM1-710B8	--	BNC Male
35	BM1-710A1GTNRD		BNC Male
36	BM1-710A1G	--	BNC Male
37	BML1-710B1	303-2CSTP	BNC Right Angle Male
38	BML1-710A4	303-5CSTP	BNC Right Angle Male
39	BML1-710A5	303-510CSTP	BNC Right Angle Male
40	BML1-710A2	303-5CSQSTP	BNC Right Angle Male
41	BML1-710A1	--	BNC Right Angle Male
42	RF1-710B1	125-2CSTP	RCA Female
43	RF1-710A4	125-6CSTP	RCA Female
44	RF1-710A5	125-610CSTP	RCA Female
45	RF1-710A2	125-6CSQSTP	RCA Female
46	RF1-710A1	--	RCA Female
47	RF1-710A1	--	RCA Female
48	RM1-710B1	100-2CSTP	RCA Male
49	RM1-710A4	100-6CSTP	RCA Male
50	RM1-710A5	100-610CSTP	RCA Male
51	RM1-710A2	100-6CSQSTP	RCA Male
52	RM1-710A2G	100-6CSQSGTP	RCA Male
53	RM1-710A1	--	RCA Male
54	RM1-710A1G	--	RCA Male
55	RM1-710B2	--	RCA Male
56	RML1-710B1	101-2CSTP	RCA Right Angle Male
57	RML1-710A4	101-6CSTP	RCA Right Angle Male

Item #	Fu Ching Model No.	Gem Model No.	Fastener Type
58	RML1-710A5	101-610CSTP	RCA Right Angle Male
59	RML1-710A2	101-6CSQSTP	RCA Right Angle Male
60	RML1-710A1	--	RCA Right Angle Male

(CFF IV.C.28.9 (undisputed) (last column omitted).) With respect to Defaulting Respondents, PPC accuses Fei Yu Models 039, 039B, and 040B (collectively, the "Fei Yu '257 Connectors"). (CBr. at 47.) PPC further identifies the products of a number of non-respondents in the attempt to establish a widespread pattern of infringement of the '257 patent for the purpose of obtaining a general exclusion order. (*Id.* at 48, 67.)

The Administrative Law Judge has already found that the Fei Yu Model 039B infringes the sole claim of the '076 patent. (Order No. 22 at 9-10.) PPC further identifies two products of two non-respondents in the effort to establish a widespread pattern of infringement of the '076 patent for the purpose of obtaining a general exclusion order. (CBr. at 85.)

With respect to infringement of the sole claim of the '539 patent, PPC accuses Fei Yu Model 043.

II. JURISDICTION AND IMPORTATION.

In order to have the power to decide a case, a court or agency must have both subject matter jurisdiction, and jurisdiction over either the parties or the property involved. *See Certain Steel Rod Treating Apparatus and Components Thereof*, Inv. No. 337-TA-97, Commission Memorandum Opinion, 215 U.S.P.Q. 229, 231 (U.S.I.T.C., 1981). For the reasons discussed below, the Administrative Law Judge finds the Commission has jurisdiction over this Investigation.

Respondents have responded to the Complaint and Notice of Investigation and fully participated in the Investigation by, among other things, participating in discovery, participating in the hearing, and filing pre-hearing and post-hearing briefs. Accordingly, the Administrative Law Judge finds that Respondents have submitted to the personal jurisdiction of the Commission and that the Commission has in rem jurisdiction over Respondents' Fu Ching Connectors. *Certain Cloisonné Jewelry*, Inv. No. 337-TA-195, Initial Determination at 40-43 (U.S.I.T.C., March, 1985) (unreviewed).[5]

Section 337 declares to be unlawful "[t]he importation into the United States, the sale for importation, or the sale within the United States after importation by the owner, importer, or consignee, of articles" that infringe a valid and enforceable United States patent if an industry relating to the articles protected by the patent exists or is in the process of being established in the United States. *See* 19 U.S.C. §§ 1337(a)(1)(B)(i) and (a)(2). Pursuant to Section 337, the Commission shall investigate alleged violations of the Section and hear and decide actions involving those alleged violations.

With respect to the '194 patent, the importation or sale requirement of Section 337 establishing subject matter jurisdiction as to Defaulting Respondents Fei Yu, Yangzhou ZE, and Yangzhou FTC has already been established. (Order No. 22 at 6.) PPC argues that the Administrative Law Judge should find that Defaulting Respondent ZE also sold for importation the Fei Yu '194 Connectors, on the basis that PPC's Director of Marketing, Mr. Richard Haube, believes that ZE is "either related to or simply an alias used by Fei Yu." (CBr. at 18.) As PPC is seeking a general exclusion order, PPC must establish the importation or sale requirement with respect to Defaulting Respondents by substantial, reliable, and probative evidence. (*See* discussion at Recommended Determination on Remedy and Bond ("Recommended

[5] (*See also* RRSCL 1-4.)

Determination"), Section I.A.1. below. *See also* 19 U.S.C. § 1337(g)(2)(B); 5 U.S.C. § 556; *Certain Sildenafil or Any Pharmaceutically Acceptable Salt Thereof, Such As Sildenafil Citrate, and Products Containing Same*, Inv. No. 337-TA-489, Comm'n Op. on Remedy, the Public Interest, and Bonding at 4 (U.S.I.T.C., February 6, 2004) ("*Sildenafil*").)

While PPC has presented evidence to link ZE's phone numbers, address, and one possible representative with Fei Yu (*see* Tr. at 326:18-329:21), PPC has not shown that ZE was actually involved in the sale before importation, importation, or sale after importation of any accused products. Mr. Haube's testimony that he saw what "appeared to be identical products offered for sale"[6] on the ZE website and in the ZE product catalog is not substantial, reliable, and probative evidence that ZE meets the importation or sale requirement. The record does not show that PPC attempted to order any accused products or even to contact ZE. The exhibits documenting PPC's purchases of Fei Yu connectors do not mention ZE or show that ZE was in any way involved. (Order No. 22; CX-14; CX-16-19.) Moreover, the record does not show that ZE actually imported or sold accused products to anyone else in the United States. As a result, the Administrative Law Judge finds that PPC has not shown by substantial, reliable, and probative evidence that Defaulting Respondent ZE sold for importation, imported, or sold after importation the Fei Yu '194 Connectors.

With respect to the '257 patent, the importation or sale requirement of Section 337 establishing subject matter jurisdiction with respect to Respondents has already been established. (Order No. 18 at 5. *See also* RBr. at 10.) With respect to the Defaulting Respondents, the Administrative Law Judge presumed the facts alleged in the Complaint to be true pursuant to Commission Rule 210.16(c). (Order No. 18 at 5.) However, as noted in Order 22, this

[6] (Tr. at 329:17-21.) Printouts from the ZE website or the ZE product catalog do not appear to have been offered into evidence.

presumption does not apply if a complainant is seeking a general exclusion order. (*See* discussion at Recommended Determination, Section I.A.1. below.) The Fei Yu '257 Connectors are among those Fei Yu models that the Administrative Law Judge specifically determined based on substantial, reliable, and probative evidence submitted by PPC were part of the sale for importation into the United States by Defaulting Respondents Fei Yu, Yangzhou ZE and Yangzhou FTC. (*See* Order No. 22 at 5-6.) However, for the reasons discussed above with respect to the '194 patent, the Administrative Law Judge finds that PPC has not shown by substantial, reliable, and probative evidence that Defaulting Respondent ZE sold for importation, imported, or sold after importation the Fei Yu '257 Connectors.

With respect to the '539 patent, the Administrative Law Judge specifically determined, based on substantial, reliable, and probative evidence submitted by PPC, that the Fei Yu Model 043 was sold for importation into the United States by Defaulting Respondents Fei Yu, Yangzhou ZE and Yangzhou FTC. (*See* Order No. 22 at 5-6.) However, for the reasons discussed above with respect to the '194 patent, the Administrative Law Judge finds that PPC has not shown by substantial, reliable, and probative evidence that Defaulting Respondent ZE sold for importation, imported, or sold after importation Fei Yu Model 043.

With respect to the '076 patent, the importation or sale requirement of Section 337 establishing subject matter jurisdiction as to Defaulting Respondents Fei Yu, Yangzhou ZE, and Yangzhou FTC has already been established. (Order No. 22 at 6.) However, for the reasons discussed above with respect to the '194 patent, the Administrative Law Judge finds that PPC has not shown by substantial, reliable, and probative evidence that Defaulting Respondent ZE sold for importation, imported, or sold after importation Fei Yu Model 039B.

Thus, the Administrative Law Judge finds that Respondents and Defaulting Respondents Fei Yu, Yangzhou ZE, and Yangzhou FTC sell for importation, import, or sell after importation into the United States, articles that are accused in this Investigation. The Administrative Law Judge further finds that all of the accused products have been imported into the United States. (Order No. 18 at 5; Order No. 22 at 5-6; RBr. at 10; CX-14; CX-16-19.) The importation or sale requirement of Section 337 is satisfied, with the exception of Defaulting Respondent ZE.[7]

III. CLAIM CONSTRUCTION.

A. Applicable Law.

This Investigation concerns two utility patents and two design patents. *See* 73 Fed. Reg. 31145 (2008). All of the unfair acts alleged by PPC are infringements of the '194 and '257 utility patents and the '539 and '076 design patents.

1. Utility Patents.

Any finding of infringement requires a two-step analysis. First, the asserted patent claims must be construed as a matter of law to determine their proper scope.[8] Second, a factual determination must be made whether the properly construed claims read on the accused devices. *See Markman v. Westview Instruments, Inc.*, 52 F.3d 967, 976 (Fed. Cir. 1995) (*en banc*), *aff'd*, 517 U.S. 370 (1996).

Claim construction begins with the language of the claims themselves. Claims should be given their ordinary and customary meaning as understood by a person of ordinary skill in the art, viewing the claim terms in the context of the entire patent. *Phillips v. AWH Corp.*, 415 F.3d

[7] However, the importation or sale requirement of Section 337 is presumed satisfied for Defaulting Respondent ZE for purposes of a limited exclusion order. 19 C.F.R. § 210.16(c).

[8] Only claim terms in controversy need to be construed, and then only to the extent necessary to resolve the controversy. *Vanderlande Indus. Nederland BV v. Int'l Trade Comm.*, 366 F.3d 1311, 1323 (Fed. Cir. 2004); *Vivid Tech., Inc. v. American Sci. & Eng'g, Inc.*, 200 F.3d 795, 803 (Fed. Cir. 1999).

1303, 1312-13 (Fed. Cir. 2005). In some cases, the ordinary meaning of claim language is readily apparent and claim construction will involve little more than "the application of the widely accepted meaning of commonly understood words." *Id.* at 1314. In other cases, claim terms have a specialized meaning and it is necessary to determine what a person of ordinary skill in the art would have understood disputed claim language to mean by analyzing "the words of the claims themselves, the remainder of the specification, the prosecution history, and extrinsic evidence concerning relevant scientific principles, as well as the meaning of technical terms, and the state of the art." *Id.* (quoting *Innova/Pure Water, Inc. v. Safari Water Filtration Sys., Inc.*, 381 F.3d 1111, 1116 (Fed. Cir. 2004)).

The claims themselves provide substantial guidance as to the meaning of disputed claim language. *Id.* at 1314. "[T]he context in which a term is used in the asserted claim can be highly instructive." *Id.* Likewise, other claims of the patent at issue, regardless of whether they have been asserted against respondents, may show the scope and meaning of disputed claim language. *Id.*

With respect to claim preambles, a preamble may limit a claimed invention if it (i) recites essential structure or steps, or (ii) is "necessary to give life, meaning, and vitality" to the claim. *Eaton Corp. v. Rockwell Int'l Corp.*, 323 F.3d 1332, 1339 (Fed. Cir. 2003) (citations omitted). The Federal Circuit has explained that a "claim preamble has the import that the claim as a whole suggests for it. In other words, when the claim drafter chooses to use both the preamble and the body to define the subject matter of the claimed invention, the invention so defined, and not some other, is the one the patent protects." *Id.* (quoting *Bell Communications Research, Inc. v. Vitalink Communications Corp.*, 55 F.3d 615, 620 (Fed. Cir. 1995)). When used in a patent preamble, the term "comprising" is well understood to mean "including but not limited to," and

thus, the claim is open-ended. *CIAS, Inc. v. Alliance Gaming Corp.*, 504 F.3d 1356, 1360 (Fed. Cir. 2007). The patent term "comprising" permits the inclusion of other unrecited steps, elements, or materials in addition to those elements or components specified in the claims. *Id.*

In cases where the meaning of a disputed claim term in the context of the patent's claims remains uncertain, the specification is the "single best guide to the meaning of a disputed term." *Phillips,* 415 F.3d at 1321. Moreover, "[t]he construction that stays true to the claim language and most naturally aligns with the patent's description of the invention will be, in the end, the correct construction." *Id.* at 1316. As a general rule, however, the particular examples or embodiments discussed in the specification are not to be read into the claims as limitations. *Id.* at 1323.

The prosecution history may also explain the meaning of claim language, although "it often lacks the clarity of the specification and thus is less useful for claim construction purposes." *Id.* at 1317. The prosecution history consists of the complete record of the patent examination proceedings before the U.S. Patent and Trademark Office, including cited prior art. *Id.* It may reveal "how the inventor understood the invention and whether the inventor limited the invention in the course of prosecution, making the claim scope narrower than it would otherwise be." *Id.*

If the intrinsic evidence is insufficient to establish the clear meaning of a claim, a court may resort[9] to an examination of the extrinsic evidence. *Zodiac Pool Care, Inc. v. Hoffinger Industries, Inc.*, 206 F.3d 1408, 1414 (Fed. Cir. 2000). Extrinsic evidence may shed light on the relevant art, and consists of all evidence external to the patent and the prosecution history, "including expert and inventor testimony, dictionaries, and learned treatises." *Phillips,* 415 F.3d

[9] "In those cases where the public record unambiguously describes the scope of the patented invention, reliance on any extrinsic evidence is improper." *Vitronics Corp. v. Conceptronic, Inc.*, 90 F.3d 1576, 1583 (Fed. Cir. 1996).

at 1317. In evaluating expert testimony, a court should disregard any expert testimony that is conclusory or "clearly at odds with the claim construction mandated by the claims themselves, the written description, and the prosecution history, in other words, with the written record of the patent." *Id.* at 1318. Extrinsic evidence is inherently "less reliable" than intrinsic evidence, and "is unlikely to result in a reliable interpretation of patent claim scope unless considered in the context of the intrinsic evidence." *Id.* at 1318-19.

Means-Plus-Function Claims.

Some patent claim limitations are drafted in means-plus-function format and are governed by 35 U.S.C. § 112 ¶ 6.

> An element in a claim for a combination may be expressed as a means or step for performing a specified function without the recital of structure, material, or acts in support thereof, and such claim shall be construed to cover the corresponding structure, material, or acts described in the specification and equivalents thereof.

35 U.S.C. § 112 ¶ 6. According to the Federal Circuit, "[t]he first step in construing a means-plus-function limitation is to identify the function explicitly recited in the claim." *Asyst Technologies, Inc. v. Empak, Inc.*, 268 F.3d 1364, 1369-70 (Fed. Cir. 2001). The function may only include the limitations contained in the claim language: it is improper to narrow or broaden "the scope of the function beyond the claim language." *Cardiac Pacemakers, Inc. v. St. Jude Medical, Inc.*, 296 F.3d 1106, 1113 (Fed. Cir. 2002)

The next step in the analysis of a means-plus-function claim limitation "is to identify the corresponding structure set forth in the written description that performs the particular function set forth in the claim." *Asyst*, 268 F.3d at 1369-70. Corresponding structure "must not only perform the claimed function, but the specification must clearly associate the structure with performance of the function." *Cardiac Pacemakers*, 296 F.3d at 1113.

> Section 112 paragraph 6 does not 'permit incorporation of structure from the written description beyond that necessary to perform the claimed function.' Structural features that do not actually perform the recited function do not constitute corresponding structure and thus do not serve as claim limitations.

Asyst, 268 F.3d at 1369-70 (citations omitted). For example, features that enable the pertinent structure to operate as intended are not the same as corresponding structures that actually perform the stated function. *Id.* at 1371. Different embodiments disclosed in the specification may disclose different corresponding structure. *Cardiac Pacemakers*, 296 F.3d at 1113.

A means-plus-function analysis is "undertaken from the perspective of a person of ordinary skill in the art." *Id.* While the focal point for determining the corresponding structure is the patent specification, other intrinsic evidence remains relevant. The other claims in a patent "may provide guidance and context for interpreting a disputed means-plus-function limitation, especially if they recite additional functions." *Wenger Manufacturing, Inc. v. Coating Machinery Systems, Inc.*, 239 F.3d 1225, 1233-34 (Fed. Cir. 2001). If another claim in the patent recites a separate and distinct function, "the doctrine of claim differentiation indicates that these claims are presumptively different in scope." *Id.*[10] The prosecution history of the patent may also be useful in interpreting a claim written in means-plus-function form. *Cybor Corp. v. FAS Technologies, Inc.*, 138 F.3d 1448, 1457 (Fed. Cir. 1998). "[P]ositions taken before the PTO

---

[10] The Federal Circuit has explained that claim differentiation may not be used to circumvent the requirements of Section 112 ¶6 but may still play a role during claim construction:

> Although the judicially created doctrine of claim differentiation cannot override the statutory requirements of § 112, ¶ 6, it does not necessarily follow that means-plus-function limitations must be interpreted without regard to other claims. Claim differentiation . . . is clearly applicable when there is a dispute over whether a limitation found in a dependent claim should be read into an independent claim, and that limitation is the only meaningful difference between the two claims.
>
> * * *
>
> We explained that "[a] means-plus-function limitation is not made open-ended by the presence of another claim specifically claiming the disclosed structure which underlies the means clause or an equivalent of that structure." Thus, *Laitram* held that the stringencies of a means-plus-function limitation are not to be avoided by the mere addition of a dependent claim that recites the corresponding structure disclosed in the specification. However, *Laitram* does not stand for the broader proposition suggested by CMS, viz., that a means-plus-function limitation must be interpreted without regard to other claims.

Id. (internal citations omitted).

may bar an inconsistent position on claim construction under § 112 ¶6" if a "competitor would reasonably believe that the applicant had surrendered the relevant subject matter" as a result of "clear assertions made in support of patentability." *Id.*

2. Design Patents.

Design patents are "typically claimed as shown in drawings," and therefore claim construction for design patents "is adapted accordingly." *Egyptian Goddess, Inc. v. Swisa, Inc.*, 543 F.3d 665, 679 (Fed. Cir. 2008). Detailed verbal descriptions of a claimed design are not required. *Id.*

B. Level of Skill in the Art.

Claims should be given their ordinary and customary meaning as understood by a person of ordinary skill in the art. *Phillips*, 415 F.3d at 1312-13. Yet, the parties have not defined the field of art or level of ordinary skill in the art that is applicable to the '194 and '257 patents in this Investigation in their post-hearing briefing. The Administrative Law Judge finds that because the private parties have failed to brief these issues, they have waived them. (Order No. 2, Ground Rule 11.1.)

Lacking post-hearing briefing by the parties, the Administrative Law Judge examined the parties' pre-hearing briefs and expert reports, which are not in evidence, for guidance on the parties' positions in determining the appropriate field of art and level of skill in the art. PPC appears to be the only party to have identified these:

> [T]he art involved with the inventions of US patent 6,558,194 and US patent 5,470,257 is the design and manufacture of coaxial cable connectors. A person of ordinary skill in the art is one who has engineering training reflected by at least a bachelor's degree in engineering and several years experience in the cable and telecommunications industry relating to the design, manufacture, or utilization of coaxial cable connectors in communications systems.

(*See* Initial Report of Dr. Charles A. Eldering,[11] dated March 1, 2009, at 3-4. *See also* Opinion of Dr. Tim A. Osswald,[12] dated February 26, 2009, at 3 (bachelor's degree in mechanical engineering, electrical engineering, or materials science and engineering coupled with several years of industrial experience designing products).)

The Administrative Law Judge finds that a person of ordinary skill in the art of the design and manufacture of coaxial cable connectors with respect to the '194 and '257 patents would have at least a Bachelor of Science degree in engineering and at least three years of experience in the cable and telecommunications industry relating to the design, manufacture, or utilization of coaxial cable connectors in communications systems. The disputed terms in this Investigation will be construed in accordance with this definition of a person of ordinary skill.

C. The Disputed Claim Terms of the '194 Patent and Their Proper Construction.

The claim terms of the '194 patent are not in issue (*see* CBr. at 10; SBr. at 12[13]), and therefore should be given their plain and ordinary meaning. *Phillips*, 415 F.3d at 1312-1313.

D. The Disputed Claim Terms of the '257 Patent and Their Proper Construction.

PPC is asserting claims 1 and 5 of the '257 patent against all respondents. However, only portions of the language of claim 1 are disputed.

[11] Dr. Eldering is PPC's expert in the field of coaxial cable connectors. (Tr. at 664.)
[12] Dr. Osswald is PPC's expert in mechanical engineering, polymers and plastics. (Tr. at 947-48.)
[13] Respondents' post-hearing briefs only relate to the '257 patent and do not address the '194 patent.

1. Claim 1, Portion of Element 'a'—"*an outer collar surrounding and fixed relative to said inner post*"

PPC argues that the claimed element "an outer collar surrounding and fixed relative to said inner post" should be given its plain and ordinary meaning. (CBr. at 43.)

Respondents argue that the claimed element "means the outer collar (30) cannot move in relationship to the inner post (28)." (RBr. at 34.)

Staff agrees with PPC that "the term should receive a plain meaning construction." (SBr. at 15.)

The first disputed portion of claim 1 of the '257 patent, "an outer collar surrounding and fixed relative to said inner post," is located in element 'a.' Element 'a' reads—

> a connector body comprising a tubular inner post extending from a front end to a rear end, and including <u>an outer collar surrounding and fixed relative to said inner post</u> at a location disposed rearwardly of said front end, said outer collar cooperating in a radially spaced relationship with said inner post to define an annular chamber with a rear opening;

(JX-1 at 5:59-66 (emphasis added).) The language of the disputed phrase when considered in the context of the entire claim indicates that the claimed invention has an outer collar that cooperates in a radially spaced relationship with a tubular inner post to make an annular chamber. There is no limitation preventing the outer collar from making axial rotations in relation to the inner post, only a requirement that it be fixed relative to the inner post so that an annular chamber is created. Therefore, the Administrative Law Judge finds that a person of ordinary skill in the art would understand the claimed phrase "an outer collar surrounding and fixed relative to said inner post" to have its plain and ordinary meaning.

The Administrative Law Judge finds that this understanding is confirmed by the specification, which explains that while a preferred embodiment would have "the outer collar **30** and the inner post . . . formed integrally as a single piece," an alternative embodiment could have

an outer collar and flange made of a "separate piece press fitted onto the outer surface of the inner post **28**." (JX-1 at 3:55-62.) A person of ordinary skill in the art would likely find that separate pieces would permit axial rotation of the outer collar without disrupting the annular chamber formed in conjunction with the tubular inner post. *See also Vulcan Engineering Co., Inc. v. Fata Aluminum, Inc.*, 278 F.3d 1366, 1376 (Fed. Cir. 2002) ("claims are construed in light of the specification, and are not limited to a designated 'preferred embodiment' unless that embodiment is in fact the entire invention presented by the patentee"). Based on the foregoing, the Administrative Law Judge finds that a person of ordinary skill in the art would understand that "an outer collar surrounding and fixed relative to said inner post" does not require an immobile outer collar.

Considering the above intrinsic support, the Administrative Law Judge finds that the extrinsic evidence discussed in Respondents' initial post hearing brief *without any citation to admitted exhibits*, namely dictionary definitions for the words "fixed" and "relative," does not shed additional light on the meaning of "an outer collar surrounding and fixed relative to said inner post." The Administrative Law Judge further notes that the Infringement Study of U.S. Patent No. 5,470,257 submitted by Respondent Fu Ching in support of its response to the Complaint also finds that a person of ordinary skill in the art would understand element 'a' to have its plain and ordinary meaning. (Respondent Fu Ching Technical Industrial Co. Ltd.'s Response to the Complaint Under Section 337 of the Tariff Act of 1930 as Amended, dated June 23, 2008 ("Fu Ching Response"), Ex. 1 at Section VII.B.)

2. Claim 1, Portions of Element 'b' –"*fastener means . . . for attaching said end connector to said system component*"

The private parties initially represented that they were in agreement with respect to the claim language "fastener means . . . for attaching said end connector to said system component."

(CBr. at 42; RBr. at 34.) They agreed that the term is written in means-plus-function format, requiring the function of "attaching the end connector to a system component" and the corresponding structure of "an internally threaded cylindrical nut." (*Id.*)

However, Staff did not fully agree with this proposed construction, and argued that the "internally threaded cylindrical nut must be rotatable relevant to the connector body." (SBr. at 16.) In response to Staff, Respondents have shifted their position to claim that "Staff appears to have correctly identified that the corresponding structure of the fastener means must include an internally threaded cylindrical nut that rotates independent of the connector body." (RRBr. at 23-24.) PPC counters that Staff seeks to add structure that "is not necessary to accomplish the claimed function of 'attaching the end connector to a system component.'" (SRBr. at 38-39.)

As an initial matter, the Administrative Law Judge finds that Respondents have waived the argument that the corresponding structure of the fastener means must include an internally threaded cylindrical nut that rotates independent of the connector body. *See* Ground Rule 11.1 (issues not discussed in the post-trial brief deemed waived). Immediately prior to the hearing, counsel for Respondents, Mr. Horvack, specifically stated on the record: "'Fastener' means[:] we do have an agreement on both the function and the structure, so I won't take up our time on that." (Tr. at 67:22-24.) During Mr. Horvack's opening statement, he said: "with respect to fastener means, there is an agreement concerning what that construction is. And it is a nut with an internal set of threads." (Tr. at 128:15-18.) This position was confirmed in Respondents' initial post hearing brief:

> The parties agree concerning the construction of "fastener means." The "fastener means" limitation is written in a means-plus-function format, and requires: (1) the function of attaching the end connector to a system component, and (2) the corresponding structure of an internally threaded cylindrical nut.

(RBr. at 34.) Respondents were aware of Staff's position, as it was stated almost verbatim in Staff's pre-hearing brief, yet they chose to make a different proposed claim construction at the hearing and in the initial post-hearing brief. (*See* Prehearing Brief of the Commission Investigative Staff at 15-16.) Respondents do not provide a rationale for why they suddenly agree with Staff, or why this late shift is permissible. The Ground Rules are designed to prevent a shifting sands approach to claim construction, which, if allowed, could unfairly prejudice other parties at a late stage in an investigation. *See Certain Laser Imageable Lithographic Printing Plates*, Inv. No. 337-TA-636, Initial Determination at 22-23 (U.S.I.T.C., July 24, 2009). Thus Respondents' arguments raised in their post-hearing reply brief with respect to "fastener means" will not be given weight. Staff's arguments, however, must be still be addressed.

The disputed portion of claim 1 of the '257 patent, "fastener means . . . for attaching said end connector to said system component[,]" is located in element 'b.' Element 'b' reads—

> fastener means at the front end of said inner post for attaching said end connector to said system component"

(JX-1 at 5:67-6:1.) "Said inner post" refers back to the claim language "tubular inner post extending from a front end to a rear end" found in element 'a', and both "said end connector" and "said system component" refer back to the claim language "end connector for connecting a coaxial cable to a system component, said end connector comprising . . ." found in the claim preamble. (*Id.* at 5:57-63.) The function explicitly recited[14] in the claim is "attaching said end connector to said system component."

In terms of identifying the corresponding structure that must attach the end connector to a system component, the specification makes several references to "fastener":

> [1] A fastener on the front end of the tubular post serves to attach the end connector to an equipment port or other like system component.

[14] *Asyst*, 268 F.3d at 1369-70.

* * *

[2] Referring additionally to FIG. **2**, it will be seen that the end connector **10** includes a connector body **22**, a cylindrical fastener **24** and a tubular locking member.

* * *

[3] The fastener **24** is internally threaded as at **40** and is provided with an inner circular shoulder **42** seated in a circular groove **44** in the outer surface of the post **28** at a location adjacent to the front end **28a**. The fastener **24** and inner post **28** are relatively rotatable, with an optional 0-ring seal **46** seated in a second groove **48** and serving as a moisture barrier.

* * *

[4] The fastener **24** may then be employed to attach the connector to a system component, typically a threaded port **63** or the like.

(JX-1 at 2:31-34, 3:46-48, 4:3-9, 4:66-67.) In addition, the "fastener **24**" is shown in several figures:

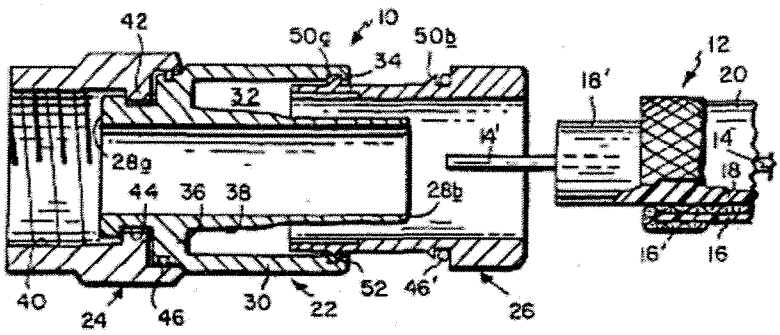

FIG. 1

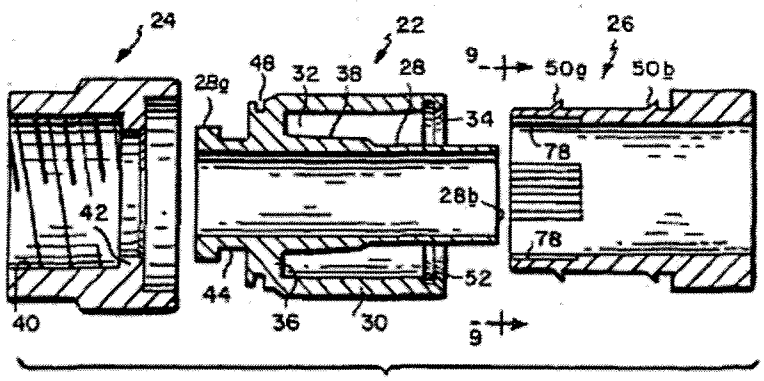

FIG. 2

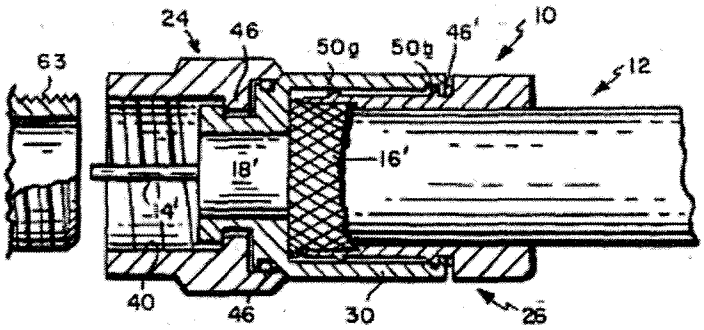

FIG. 5

(*Id.*, Figs. 1-2, 5. *See also id.*, Figs. 4, 6.) The first (JX-1 at 2:31-34) and last (*id.* at 4:66-67) references to the "fastener" in the specification refer to and confirm the function of "fastener means" that was expressly stated in element 'b' of claim 1. The second reference to "fastener" (*id.* at 3:46-48) describes the fastener as cylindrical in shape. At issue is the third discussion of "fastener" in the specification (*id.* at 2:31-34, 4:3-9), and whether the language "[t]he fastener **24** is internally threaded as at **40** and is provided with an inner circular shoulder **42** seated in a circular groove **44** in the outer surface of the post **28** at a location adjacent to the front end **28a**" by itself discloses sufficient structure to perform the function of attaching the end connector to a system component.

The Administrative Law Judge finds that a person of ordinary skill in the art would find that the fastener means could perform its intended function of attaching the end connector to a system component, such as a threaded port (*see* JX-1, Fig. 5 at 63), if it is internally threaded. The fastener structure is likewise secured to the end connector by way of an inner circular shoulder seated in a circular groove in the outer surface of the front end of the post. In order to attach the end connector to a system component, rather than the converse, the fastener must be able to rotate relative to the connector body so that it may accomplish its attaching function by threading with a reciprocal member of the system component while the connector is terminated to a cable. The circular shoulder of the fastener within the circular groove of the tubular post is

the structure that enables this to happen. Therefore, the Administrative Law Judge agrees with Staff that the fastener means must be rotatable in relation to the inner post.

The Administrative Law Judge further notes that the written description and the figures do not describe or depict the cylindrical fastener as a "nut." At a minimum, the cylindrical fastener (24) shown in the patent figures could be an internally threaded, cylindrically shaped and rotatable tube, cylinder, pipe, collar, shell, nut, or other like structure. (*See e.g.*, JX-1, Fig. 2 at 24.) The Administrative Law Judge notes that during the '257 patent prosecution, applicant referred to "nut members" in the Nikitas prior art reference. (*See* JX-2 at JOINT-TRIAL-EXHIBIT-000139.) Applicant could have used the word "nut" in the claim language or in the written description. Instead applicant chose a different term (fastener) that implies a broader scope. *See, e.g., Acumed LLC v. Stryker Corp.*, 483 F.3d 800, 807 (Fed. Cir. 2007). Thus the Administrative Law Judge finds that the corresponding structure of "fastener means" is cylindrical in shape, internally threaded, rotatable, and secured to the post of the end connector by way of an inner circular shoulder seated in a circular groove in the outer surface of the post at a location adjacent to the post's front end. The "fastener means" may be, but is not required to be, a nut.

3. **Claim 1, Portion of Element 'd'** –*"engagement means circumscribing the interior of said outer collar and the exterior of said locking member, said engagement means coacting in circular interengagement to inseparably couple said locking member to said connector body at a first position"*

The '257 patent in claim 1 includes the following language:

> engagement means circumscribing the interior of said outer collar and the exterior of said locking member, said engagement means coacting in circular interengagement to inseparably couple said locking member to said connector body at a first position and to accommodate limited axial movement of said locking member relative to said connector body between said first position and a second position....

(JX-1, Col. 6:4-11.) The parties agree that "engagement means" should be construed as a means-plus-function claim. (CBr. at 30; RBr. at 11-12; SBr. at 17.) Claim construction is a matter of law, and this applies with equal force to the interpretation of the scope and meaning of means-plus-function limitation. *Cardiac Pacemakers v. St. Jude Medical Inc.,* 296 F.3d 1106, 1113 (Fed. Cir. 2002). The Administrative Law Judge agrees with the parties. There is a presumption that a claim limitation that includes the word "means" is intended to invoke means-plus-function treatment. *Rodime PLC v. Seagate Tech., Inc.,* 174 F.3d 1294, 1302 (Fed. Cir. 1999). That presumption may be rebutted if the claim limitation itself recites sufficient structure for performing the recited function. (*Id.*) There is no structure recited in claim 1.

PPC and Staff disagree with Respondents regarding the function of the "engagement means." PPC and Staff are of one mind that the function is as follows:

> to inseparably couple the locking member to the connector body at a first position and to accommodate limited axial movement of the locking member relative to the connector body between the first position and the second position

(CBr. at 30; SBr. at 17.) On the other hand, Respondents propose a slightly different construction:

> to inseparably couple the locking member to the connector body at a first position, and allowing limited axial movement of the locking member relative to the connector body between the first and second positions

(RBr. at 12.)

Although there is but a minor difference between the two proposed constructions, the Administrative Law Judge finds that the construction proposed by PPC and Staff, by reason of its correspondence with the actual words chosen by the patentee, is more in keeping with the patent as a whole. "The construction that stays true to the claim language and most naturally aligns with the patent's description of the invention will be, in the end, the correct construction."

Phillips, 415 F.3d at 1316. The words quoted by PPC and Staff are not shown by the specification or otherwise in the intrinsic evidence to have any special authorial meanings. The Respondents have not demonstrated that their proposed construction is more understandable or intelligible to a person of ordinary skill in the art than the actual words chosen by the patentee. Thus, the Administrative Law Judge concludes that the function of the engagement means is to inseparably couple the locking member to the connector body at a first position and to accommodate limited axial movement of the locking member relative to the connector body between said first position and a second position.

That is but the first step in claim construction of the term "engagement means." Claim construction of a means-plus-function limitation involves two steps. First, it must be determined what the claimed function is, and next, the corresponding structure must be identified. *Applied Med. Res. Corp. v. U.S. Signal Corp.,* 448 F.3d 1324, 1332 (Fed. Cir. 2006).

PPC proposes that the structure of the "engagement means" should be as follows:

> The rear face (56) of the first radially protruding circular shoulder (50a) circumscribing the exterior of the locking member (26) coacting in circular interengagement with the internal groove (52) circumscribing the interior of the outer collar (30).

(CBr. at 33.) Staff agrees with that construction. (SBr. at 18.) Respondents propose a different structure:

> A first radially protruding circular shoulder (50a) with generally perpendicular face (56) and an inclined ramp-like face (54) that is configured and dimensioned to coact in snap engagement with an internal groove (52) and an internal groove (52) at the rear end of the outer collar of the connector body.

(RBr. at 23.)

Construction of a means-plus-function limitation is to include the limitations contained in the claim language, and only those limitations. *Lockheed Martin Corp. v. Space Sys/Loral, Inc.,*

249 F.3d 1314, 1324 (Fed. Cir. 2001). It is improper to narrow the scope of the function beyond the claim language. *Id.* It is equally improper to broaden the scope of the claimed function by ignoring clear limitations in the claim language. *Id.* The claim function as recited above is twofold: (i) to inseparably couple the locking member to the connector body at a first position; and (ii) to accommodate limited axial movement of the locking member relative to the connector body between the first position and the second position.

The structure proposed by PPC and Staff addresses the first element of the claimed function, to inseparably couple the locking member to the connector body at a first position, but it does not address the second element, to accommodate limited axial movement of the locking member relative to the connector body between the first position and a second position. Therefore, it improperly narrows the function beyond the claim language.

Although the structure proposed by Respondents does include a provision for accommodating axial movement between the first and a second position (a shoulder having an inclined front face), it improperly broadens the limitations of the function to include a shoulder that is configured and dimensioned for snap engagement with the internal groove of the connector body. Snap engagement is not necessary either to inseparably couple the locking member to the connector body or to accommodate limited axial movement of the locking member relative to the connector body between the first and a second position.

It is noted that the specification explicitly teaches that a shoulder that has an inclined face accommodates movement of the locking member relative to the connector body, and one that has a generally perpendicular face resists such movement. (JX-1 at 4:22-25, 5:52-54.)

The Administrative Law Judge concludes that a person of ordinary skill in the art would understand the corresponding structure to be as follows: A first radially protruding circular

shoulder (50a) having a generally perpendicular rear face and an inclined ramp-like front face circumscribes the exterior of the locking member (26) and coacts in circular interengagement with an internal groove (52) circumscribing the interior of the outer collar (30).

a) **Portion of Element 'd' — "inseparably couple".**

PPC and the Staff are in agreement on what should be the proper construction of the phrase "inseparably couple." They propose the following:

> locking member is not detachable from the connector body at a first position prior to and during installation when subjected to the normal and ordinary forces applied to connectors during the shipping, handling and installation of the connectors

(CBr. at 36; SBr. at 20.)

Respondents propose a different construction:

> The locking member is not capable of being completely and fully separated or detached from the connector body at a first position.

(RBr. at 2.)

Prior Claim Construction.

This Investigation is not the first opportunity to adjudicatively construe the term "inseparably couple" of claim 1 of the '257 patent. In 2002, six years before this Investigation started, there was a federal patent suit in the Southern District of Florida entitled *John Mezzalingua Associates, Inc., d/b/a PPC v. Thomas & Betts Corporation*, Case No. 01-CV-6752, wherein PPC alleged that Thomas & Betts Corporation ("Thomas & Betts") infringed PPC's '257 and another patent. The district court judge had to construe the term "inseparably couple" in order to rule on a motion for summary judgment filed by the defendant arguing that its accused one-piece "Snap-N-Seal" connector did not infringe PPC's 'patents.

The "Order On Defendant's Motion For Summary Judgment" issued by the judge in that case is not included among the exhibits admitted in evidence in this Investigation, although it is included in the record, having been marked as exhibit JX-4 and cited and quoted in support of motions filed by both PPC and Respondents. According to the parties' joint statement, the exhibit was "rejected"; however, the transcript of the hearing shows that the exhibit was never offered in evidence, although it was used during the examination of one of PPC's experts, Dr. Eldering. (Tr. at 1225-36.) Furthermore, PPC, Respondents, and Staff have made use of that order in arguments in their respective post-hearing briefs, without any objections or motions to strike by the other parties: CBr. at 38-39; CRBr. at 19-21; RRBr. at 2-3; SRBr. at 3-4. Because the parties have unambiguously identified the case John Mezzalingua Associates, Inc., d/b/a PPC v. Thomas & Betts Corporation, U.S. District Court for the Southern District of Florida Case No. 01-CV-6752, as relevant to the Investigation, the Administrative Law Judge has determined to take judicial notice of the publicly available case docket, including the Order On Defendant's Motion For Summary Judgment ("Summary Judgment Order").

The district court judge, at page 17 of the Summary Judgment Order, construed the term "inseparably couple" to mean "that the locking member does not completely and fully separate or detach from the connector body prior to and during installation." *See* Summary Judgment Order at 17. In the course of formulating that claim construction, the judge did not include the qualifying words "during normal storage, handling and installation," which PPC advocated. (*Id.* at 8.) He partly explained the reasoning behind his claim construction by saying, "it is clear that the locking member is not detachable from the connector body prior to and during installation." (*Id.* at 17, n. 6.)

As a result, the district court judge found that the Thomas & Betts Snap-N-Seal connector does not infringe, because its locking member is detachable from the connector body prior to and during installation on a cable. PPC appealed to the Federal Circuit on the basis, among others, that the judge had erroneously construed the term "inseparably couple." The decision was affirmed, *per curiam*, under *John Mezzalingua Associates, Inc. v. Thomas & Betts Corp.*, 54 Fed. Appx. 697, 2003 WL 136095 (Fed. Cir. 2003) (unpubl.).

Where a determination of the scope of a patent claim has been made in a prior case and that determination was essential to a judgment on the issue of infringement, collateral estoppel applies in a later case as to the scope of such claims. *Pfaff v. Wells Electronics, Inc.*, 5 F.3d 514, 518 (Fed. Cir. 1993). A prior claim interpretation has issue preclusive effect in a subsequent case insofar as it was necessary to the judgment of noninfringement in the previous case. (*Id.*) That is the situation in this Investigation as regards the district court judge's claim construction in the Thomas & Betts case.

In this Investigation, just as in the Thomas & Betts case, there is need to construe the term "inseparably couple" as used in claim 1 of the '257 patent. According to Federal Circuit law, the scope of the construction that was determined in the prior case is issue preclusive. Adding words to or subtracting words from the prior construction, the effect of which would in some way or to some degree modify what was expressed in, or alter the effect of, the prior construction, would violate the principle of issue preclusion, especially if, in the case of adding words, they had been considered and rejected. *See id.* at 518-519. Regardless of any temptation to revise or refine the prior claim construction, the fact remains that it was reviewed through

culmination of the appellate process[15] and found legally sufficient. For that reason, revamping here is not called for.

Therefore, it is concluded that the term "inseparably couple" means that the locking member does not completely and fully separate or detach from the connector body prior to and during installation.

Administrative Law Judge's Claim Construction.

Had there not been a prior claim construction, and were collateral estoppel not involved in this Investigation, the Administrative Law Judge would have construed the term "inseparably couple" similarly, for the following reasons.

Claim construction begins with the language of the claims themselves, which should be given their ordinary and customary meaning, as understood by a person of ordinary skill in the art, viewing the claim terms in the context of the entire patent. *Phillips,* 415 F.3d at 1312-13. In some cases the meaning of claim language is readily apparent and claim construction will involve little more that "the application of the widely accepted meaning of commonly understood words." *Id.* at 1314.

The term "inseparably couple" is not specially defined within the body of claim 1, and contains what appears to be commonly understood elements: inseparable and couple, indicating that two conjoined components cannot be disjoined. PPC and Staff are of the opinion that,

---

[15] The language of Federal Circuit Rule 36 reads as follows:

Rule 36. Entry of Judgment – Judgment of Affirmance Without Opinion

The court may enter a judgment of affirmance without opinion, citing this rule, when it determines that any of the following conditions exist and an opinion would have no precedential value:

(a) the judgment, decision, or order of the trial court appealed from is based on findings that are not clearly erroneous;
(b) the evidence supporting the jury's verdict is sufficient;
(c) the record supports summary judgment, directed verdict, or judgment on the pleadings;
(d) the decision of an administrative agency warrants affirmance under the standard of review in the statute authorizing the petition for review; or
(e) a judgment or decision has been entered without error of law.

Fed.Cir.R., Rule 36.

according to the patent specification, the term "inseparably couple" has a special meaning, and that it only pertains to "normal and ordinary forces" applied to connectors during their shipping, handling, and installation on cable ends. (CBr. at 36; SBr. at 20.) (The specification uses the word "storage" rather than "shipping"; however, that does not affect the merits of their argument.)

PPC argues that, in light of the patent specification, the term "inseparably couple" must be construed as quoted above, and points to portions of the specification which it believes support its reasoning:

> the specification of the Szegda '257 patent states that this 'inseparably coupling' between the locking member and the connector body at a first position requires that the two components remain coupled and not separate prior to installation (i.e., storage and handling) and during installation on a cable end

(CBr. at 37.)

However, language in the specification that refers to various stages when connectors are subjected to forces that might cause separation or detachment of the locking members ("storage, handling, and installation on a cable end") (JX-1 at 5:39) does not give rise to an inference that only "normal and ordinary forces" are implicated. For instance, the specification also points out that "mishandling or loss of the outer sleeve component remains a serious problem during the critical installation phase." (JX-1 at 1:63-65.) "Mishandling" generally means "to handle badly or roughly; abuse, maltreat, or mismanage." *Webster's New World Collegiate Dictionary*, 921 (4th Ed., 2008).[16] Mishandling of a connector does not imply restriction to the use of normal and ordinary force.

Other portions of the specification conflict with PPC's construction, too. Such as the following statement:

---

[16] "The administrative law judge may take judicial notice of dictionary definitions." *Certain Audio Processing Integrated Circuits and Products Containing* Same, Inv. No. 337-TA-538, Final Initial and Recommended Determinations at 11 (U.S.I.T.C., March 20, 2006.)

> In all cases, the coaction of shoulder 50a with groove 52 serves to retain the connector body and locking member in an assembled state during storage, handling, and installation on a cable end. This eliminates any danger of the locking member being dropped or otherwise mishandled during assembly. The shoulder 50b coacts with groove 52 to retain the locking member in its final clamped position.

(JX-1, col. 1:37-43.) The scope of the phrase, "[i]n all cases," implies no exceptions, reservations, or tolerances. This broad terminology is repeated in one of the stated objectives of the patent: "the outer sleeve component remains at all times integrally connected to the inner post, both prior to and during installation." (JX-1 at 2:9-11.) "In all cases" and "at all times" are sweeping terms and stand in opposition to the "normal and ordinary forces" limitation that PPC and Staff argue for. The statement that the engagement means "eliminates any danger" of the locking member being dropped or otherwise mishandled during assembly, fortifies the observation that the language of the specification is wholly consistent with the normal and ordinary meaning of the word "inseparably."

PPC attempts to bolster its argument for its proposed claim construction by referencing the case of *Hilgraeve Corp. v. Symantec Corp.*, 265 F.3d 1336, 1343 (Fed. Cir. 2001) and similar cases holding that "tests of an accused device under unusual conditions are not necessarily relevant to an infringement analysis." CBr. at 39. Those cases involve infringement analyses, not claim construction. Claims are not to be construed in light of the accused product; the claims measure the invention. *Phillips*, 415 F.3d at 1312.

PPC, referring to a document not in evidence (CX-209), argues that no connector can be said to truly sustain an inseparable position if it must resist extraordinary forces or if the user is willing to destroy the components during the process. (CBr. at 40.) It is undeniable that some amount of force will disjoin any connector having conjoined parts. But if a connector has been designed so that the amount of force needed to separate the parts will, in the process, destroy

them, that is one way of accomplishing a stated objective of the '257 patent, which is to keep the locking member "integrally connected" to the connector body "at all times." That would make the connector foolproof as far as separation of the locking member from the connector body. If the inventor determined that separation of the locking member imparts an intolerable disutility to the connector, one way of avoiding that disutility is to design the connector in such a way that only destructive force will separate the locking member. That possibility is not incompatible with the stated objectives of the '257 patent.

Not only is this suggested by the claims and specification but also by the drawings that accompany them. They show shoulders protruding from the surface of the locking member, enclosed within a narrow channel, or groove, on the inside of the connector body. (JX-1, Figs 4 and 5.) The rear faces of the shoulders are perpendicular and when they are engaged with the groove portion of the connector body, will butt up against the side of the groove if rearward motion is attempted. In order to separate the locking member from the connector body when they are in the first position of interengagement, some amount of force is needed to remove the engaged shoulder from the groove in order to separate the two parts, in which event either the shoulder or the groove, or perhaps both, might be damaged, perhaps irreparably.

However, that such damage would result can only be a matter of speculation inasmuch as none of the parties inquired of the expert witnesses with respect to how much force would be needed to separate the locking member of the patented device from the connector body and whether the necessary force would damage either the locking member or connector body, and if so, whether the damaged or destroyed components could be reassembled in that state. Therefore, no such conclusion is made by the Administrative Law Judge. The patent specification is

consistent with the idea that the '257 invention was intended to overcome the disadvantages of connectors that have detachable sleeve components, such as Samchisen:

> In U.S. Pat. No. 4,834,675 (Samchisen), an attempt was made at addressing this problem by detachably interconnecting the connector body and outer sleeve component in a parallel side-by-side relationship. This facilitates pre-installation handling and storage. However, during installation, the outer sleeve component must still be detached from the connector body and threaded onto the cable as a separate element. Thus, mishandling or loss of the outer sleeve component remains a serious problem during the critical installation phase.

(JX-1 at 1:55-65.)

The locking member of the Samchisen patent is detachable from its connector body in a wholly different way than the locking member of the Nikitas patent is detachable from its connector body. One objective of the '257 patent was to overcome or avoid detachable locking members, regardless of the method of detachment. The patent specification makes this clear:

> [A]n objective of the present invention is the provision of an improved radial compression type end connector wherein the outer sleeve component remains at all times integrally connected to the inner post, both prior to and during installation.

(*Id.* at 2:7-11.)

Therefore, Andrew Szegda, the '257 patent inventor, designed a structure that would "inseparably couple" the locking member to the connector body, and this is the way he described it:

> shoulders 50a, 50b protrude from the surface of the locking member by a radial distance "d", and are each provided with an inclined ramp-like front face 54 and a generally perpendicular rear face 56. The front faces 54 accommodate movement of the shoulders out of the groove 52 in a forward axial direction (arrow "F" in FIG. 3), whereas the rear faces 56 resist movement of the shoulders out of the groove 52 in a rearward axial direction (arrow "R" in FIG. 3).

(*Id.* at 4:22-31.)

Inasmuch as rearward displacement of the locking member relative to the connector body from the first position would eventually result in separation or detachment of the locking member from the connector body, the rear faces of the two shoulders that protrude from the surface of the locking member, by "resist[ing]" movement of the locking member in a rearward axial direction, prevent that from happening, and by that means, achieve "inseparable" coupling.

The Administrative Law Judge takes note of PPC's argument that claim 1 cannot be construed to limit movement of the locking member only in a forward direction from the first position, because under principles of claim differentiation, claim 3 would then be repetitious of claim 1. (CRBr. at 14-16.) This argument is notably different from PPC's claim construction analysis in its opening brief where it states that movement of the locking member in a rearward direction beyond the first position is not permitted. (CBr. at 33.) Principles of claim differentiation must yield to an interpretation mandated by 35 U.S.C. § 112, ¶ 6, which governs means-plus-function claims. *Cross Medical Prods. Inc. v. Medtronic Sofamor Danek, Inc.*, 424 F.3d 1293, 1304 (Fed. Cir. 2005). Furthermore, PPC's claim constructions ignore differences in the expressly claimed functions of claims 1 and 3. *See Wenger Manufacturing,* 239 F.3d at 1233-34. Claim 1 "inseparably couples" the locking member at a first position and accommodates limited axial movement between the first and second positions. (JX-1 at 6:7-11.) Claim 3, which directly depends from claim 2, and therefore incorporates the additional limitations of claim 2 over claim 1, adds further limitations, including an engagement means that coacts to "releasably retain" the locking member in the first position while accommodating movement in one direction only, forward to the second position. (*Id.* at 6:29-32.) The terms "releasably retain" and "accommodate," which are substantively different, do not refer to the same function. There is a presumption that the use of different terms in the claims connotes

different meanings. *See CAE Screenplates Inc. v. Heinrich Fiedler GMBH & Co.*, 224 F.3d 1308, 1317 (Fed. Cir. 2000). Therefore, the term "releasably retain" of claim 3 teaches that retention of the locking member at the first position, with respect to rearward movement, is less stringent then in claim 1, which contains no equivalent qualification.

Nor does the fact that the specification mentions an alternative embodiment involving oppositely inclined surfaces that make it easier to disassemble the locking member (JX-1, col. 5:52-54) contradict the inseparably couple language of claim 1. The claims of a patent need not encompass all disclosed embodiments. *TIP Systems v. Phillips & Brooks/Gladwin*, 529 F.3d 1364, 1373 (Fed. Cir. 2008).

After considering the claim language itself and the specification, a review of the prosecution history reveals that the original application for the '257 patent was denied because the Patent and Trademark Office Examiner found that claim 1 had been anticipated by the patent of Nikitas (4,408,822). (JX- 2, at JOINT-TRIAL-EXHIBIT-000049.) The Examiner also concluded that the Nikitas patent included the following:

> engagement means (48) for integrally coupling the locking member to the connector body for limited axial movement relative to the inner post and the outer collar, the locking member coacting in a first radially spaced relationship with the inner post when in a first position (see Fig. 2) to accommodate insertion of the rear end of the inner post into an end of the cable

(*Id.* at JOINT-TRIAL-EXHIBIT-000050.) This describes a one-piece connector by virtue of the coupling of the locking member and connector body in a first position at the time the connector is inserted into the end of a cable. The Examiner's findings were not appealed by the applicant.

In order to overcome the Examiner's rejection, the applicant amended claim 1 by substituting the term "inseparably couple" for the term "integrally couple." (JX-2 at JOINT-TRIAL-EXHIBIT-000108, 136.) The applicant also added words stating that the engagement

means to be circular interengagement between the interior of the outer collar and the exterior of the locking member. (*Id.* at JOINT-TRIAL-EXHIBIT-000108, 136.) The applicant also noted in the Remarks section of the Amendment that the Nikitas invention is plagued by difficulties associated with detachable nut members which are frequently dropped and sometimes lost during assembly procedures, and that the '257 "invention solves this problem by inseparably coupling tubular locking member 26 to the outer collar 30 of the connector body." (*Id.* at JOINT-TRIAL-EXHIBIT-000139 (emphasis in the original).)

The word "inseparably" expresses something different than does the word "integrally": something more than a component or essential part, which is denoted by the word "integrally." This adds an additional limitation: no longer is the connector simply a one-piece unit; it is now transformed to a one-piece unit with a locking member that does not separate or detach from the connector body. In the Remarks section of the Amendment, the underlined word "inseparably" serves to emphasize the intention of the applicant to distinguish the engagement means of the '257 connector from the engagement means of those connectors that have detachable locking members, such as Nikitas, which are not "inseparable."

For the foregoing reasons, the Administrative Law Judge finds PPC and Staff's proposed construction includes limitations that are too broad.

On the other hand, Respondents' proposed construction, by inclusion of the words "is not capable," also improperly broadens the scope of claim 1, because it includes physical impossibility, which is not supported by the evidence.

The Administrative Law Judge therefore concludes that to a person of ordinary skill in the art, the term "inseparably couple," as included in claim 1, means that the locking member does not separate or detach from the connector body prior to and during installation.

This construction is consistent with that of the district court judge in the Thomas & Betts case, with the exception that the adverbs "completely" and "fully" that he included in his construction are omitted. Their omissions do not change the substance of the prior claim construction, since they only add emphasis to verbs they modify, "separate" and "detach."

E. The Disputed Claim Terms of the '539 Patent and Their Proper Construction.

Claim construction for the '539 patent is not at issue. The Administrative Law Judge finds that issuance of a detailed verbal description of the '539 design to support claim construction is not necessary or helpful. *Egyptian Goddess*, 543 F.3d at 679.

F. The Disputed Claim Terms of the '076 Patent and Their Proper Construction.

The Administrative Law Judge previously found, and continues to find, that claim construction for the '076 patent is not at issue, and that a detailed verbal description of the '076 design to support claim construction is not necessary or helpful. (Order No. 22 at 7.)

IV. INFRINGEMENT DETERMINATION

A. Applicable Law

1. Utility Patents.

"Determination of infringement is a two-step process which consists of determining the scope of the asserted claim (claim construction) and then comparing the accused product . . . to the claim as construed." *Certain Sucralose, Sweeteners Containing Sucralose, and Related Intermediate Compounds Thereof*, Inv. No. 337-TA-604, Comm'n Op. at 36 (U.S.I.T.C., April 28, 2009) (citing *Litton Sys., Inc. v. Honeywell, Inc.*, 140 F.3d 1449, 1454 (Fed. Cir. 1998) "*Litton*"). An accused device literally infringes a patent claim if it contains each limitation recited in the claim exactly. *Litton*, 140 F.3d at 1454. Each patent claim element or limitation is

considered material and essential. *London v. Carson Pirie Scott & Co.*, 946 F.2d 1534, 1538 (Fed. Cir. 1991). In a Section 337 investigation, the complainant bears the burden of proving infringement of the asserted patent claims by a preponderance of the evidence. *Enercon GmbH v. Int'l Trade Comm'n,* 151 F.3d 1376, 1384 (Fed. Cir. 1998).

Means-Plus-Function Claims.

The determination of whether there is literal infringement with respect to a means-plus-function claim limitation consists of finding (i) "identity of claimed function" and (ii) "[e]quivalence[17] between the accused structure and that set forth in the specification[.]" *Minks v. Polaris Industries, Inc.*, 546 F.3d 1364, 1378 (Fed. Cir. 2008). The function specified in the means-plus-function claim limitation and the corresponding function of the accused device must be identical. *Id.*

> [O]nce identity of function is established, the test for infringement is whether the structure of the accused device performs in substantially the same way to achieve substantially the same result as the structure disclosed in the . . . patent. Evidence of known interchangeability between structure in the accused device and the disclosed structure has also been considered an important factor.

Id. at 1379. A difference in physical structure, by itself, is not determinative. *Id.*

2. Design Patents.

The Federal Circuit recently held en banc that the sole test for determining whether a design patent has been infringed is the Gorham, or ordinary observer, test:

> [I]f, in the eye of an ordinary observer, giving such attention as a purchaser usually gives, two designs are substantially the same, if the resemblance is such as to deceive such an observer, inducing him to purchase one supposing it to be the other, the first one patented is infringed by the other.

[17] The evaluation of equivalence with respect to structure for a literal infringement analysis of a means-plus-function claim limitation should not be confused with a doctrine of equivalents analysis. *See Chiuminatta Concrete Concepts, Inc. v. Cardinal Industries, Inc.*, 145 F.3d 1303, 1310 (Fed. Cir. 1998). An accused structure that is found to be a variant that does not literally infringe a means-plus-function limitation may still infringe under the doctrine of equivalents if, due to technological advances, it could not have been disclosed in the patent. *Id.* Thus the doctrine of equivalents may "capture after-arising technology developed after the issuance of the patent." *Welker Bearing Co. v. PHD, Inc.*, 550 F.3d 1090, 1099-100 (Fed. Cir. 2008) (internal quotations omitted).

Egyptian Goddess, 543 F.3d at 670 (quoting *Gorham Co. v. White*, 81 U.S. 511, 528 (1871)). A complainant must demonstrate infringement by a preponderance of the evidence. *Id.* at 679.

B. Analysis of the Accused Fei Yu '194 Connectors with Respect to the '194 Patent.

PPC has accused Defaulting Respondents of literal infringement of independent claims 1 and 2 of the '194 patent by the importation, the sale for importation or the sale after importation of the accused Fei Yu '194 Connectors in the United States. As discussed above, the claim terms of the '194 patent are not disputed and have their plain and ordinary meaning.

PPC argues that all of the accused Fei Yu '194 Connectors identified in Section I.E. above meet all of the limitations of claims 1 and 2 of the '194 patent. The accused Fei Yu '194 Connectors were evaluated to determine whether they met the limitations of the asserted claims of the '194 patent. Specifically, the accused Fei Yu '194 Connectors were visually inspected in various conditions, including as sectioned samples, to determine the presence of the claimed elements in the products. (CBr. at 22; Tr. at 701:25-717:17 (Eldering); CFF III.A.8 (undisputed); CFF III.C.1.1-20 (undisputed); CFF III.C.2.1-21 (undisputed); CFF III.C.3.1-20 (undisputed); CFF III.C.4.1-20 (undisputed); CX-214; CX-217; CX-220; CX-221; CX-224-25; CDX-31; CDX-32; CPX-22, 25, 26, 29, 30, 37, 40, 43-44.)

1. Claim 1

Claim 1 of the '194 patent reads as follows:

> **1.** A connector for coupling an end of a coaxial cable to a threaded port, the coaxial cable having a center conductor surrounded by a dielectric, the dielectric being surrounded by a conductive grounding sheath, and the conductive grounding sheath being surrounded by a protective outer jacket, said connector comprising:
>
> a. a tubular post having a first end adapted to be inserted into an exposed end of the coaxial cable around the dielectric thereof and under the conductive grounding sheath thereof, said tubular post having an opposing second end;

b. a nut having a first end for rotatably engaging the second end of said tubular post and having an opposing second end with an internally threaded bore for threadedly engaging the threaded port;

c. a cylindrical body member having a first end and a second end, the first end of said cylindrical body member including a cylindrical sleeve having an outer wall of a first diameter and an inner wall, the inner wall bounding a first central bore extending about said tubular post, the second end of said cylindrical body member engaging said tubular post proximate the second end thereof, said cylindrical sleeve having an open rear end portion for receiving the outer jacket of the coaxial cable, said open rear end portion being deformable;

d. a compression ring having first and second opposing ends and having a central passageway extending therethrough between the first and second ends thereof, the first end of said compression ring having a first non-tapered internal bore of a diameter commensurate with the first diameter of the outer wall of said cylindrical sleeve for allowing the first end of said compression ring to extend over the first end of said cylindrical body member, the central passageway of said compression ring including an inwardly tapered annular wall leading from the first internal bore and narrowing to a reduced diameter as compared with the first diameter; and

e. said inwardly tapered annular wall causing said rear end portion of said cylindrical sleeve to be deformed inwardly toward said tubular post and against the jacket of the coaxial cable as said compression ring is advanced axially over the cylindrical body member toward the second end of said cylindrical body member.

(CX-2 at PPC-TRIAL-000072.)

The parties do not dispute that all of the accused Fei Yu '194 Connectors meet the elements of claim 1 of the '194 patent. (CBr. at 25; SBr. at 23-24.[18]) PPC's expert, Dr. Eldering, testified that the accused Fei Yu '194 Connectors meet all of the elements of claim 1 of the '194 patent. (CBr. at 25; SBr. at 24; Tr. at 701:25-743:14 (Eldering).) PPC further submitted claim charts, sectioned physical samples, and photographs created by Dr. Eldering to show the claim elements identified by Dr. Eldering when he examined the physical samples of the Fei Yu '194 Connectors. (CBr. at 25; SBR. at 24; SFF 24-106 (undisputed); CFF III.A.8 (undisputed); CFF III.C.1.1-17 (undisputed); CFF III.C.1.19-20 (undisputed); CFF III.C.2.1-17 (undisputed); CFF

[18] Respondents' post-hearing briefs only relate to the '257 patent and do not address the '194 patent.

III.2.19-20 (undisputed); CFF III.C.3.1-17 (undisputed); CFF III.C.3.19-20 (undisputed); CFF III.C.4.1-17 (undisputed); CFF III.C.4.19-20 (undisputed); CX-214; CX-217; CX-220; CX-221; CX-224-25; CDX-31; CDX-32; CDX-64; CPX-22, 25, 26, 29, 30, 37, 43-44.)

The Administrative Law Judge finds that the undisputed evidence shows that each of Defaulting Respondents' accused Fei Yu '194 Connectors is a coaxial cable connector with "a tubular post having a first end adapted to be inserted into an exposed end of [a] coaxial cable around the dielectric thereof and under the conductive grounding sheath thereof, said tubular post having an opposing second end," "a nut having a first end for rotatably engaging the second end of said tubular post and having an opposing second end with an internally threaded bore for threadedly engaging the threaded port, "a cylindrical body member having a first end and a second end, the first end of said cylindrical body member including a cylindrical sleeve having an outer wall of a first diameter and an inner wall, the inner wall bounding a first central bore extending about said tubular post, the second end of said cylindrical body member engaging said tubular post proximate the second end thereof, said cylindrical sleeve having an open rear end portion for receiving the outer jacket of the coaxial cable, said open rear end portion being deformable," "a compression ring having first and second opposing ends and having a central passageway extending therethrough between the first and second ends thereof, the first end of said compression ring having a first non-tapered internal bore of a diameter commensurate with the first diameter of the outer wall of said cylindrical sleeve for allowing the first end of said compression ring to extend over the first end of said cylindrical body member, the central passageway of said compression ring including an inwardly tapered annular wall leading from the first internal bore and narrowing to a reduced diameter as compared with the first diameter," and "said inwardly tapered annular wall causing said rear end portion of said cylindrical sleeve

to be deformed inwardly toward said tubular post and against the jacket of the coaxial cable as said compression ring is advanced axially over the cylindrical body member toward the second end of said cylindrical body member." Therefore, the Administrative Law Judge finds that PPC has provided substantial, reliable and probative proof to establish by a preponderance of the evidence that all of Defaulting Respondents' accused Fei Yu '194 Connectors listed in Section I.E. above literally infringe claim 1 of the '194 patent.

2. Claim 2

Claim 2 of the '194 patent reads as follows:

> **2.** A connector for coupling an end of a coaxial cable to a threaded port, the coaxial cable having a center conductor surrounded by a dielectric, the dielectric being surrounded by a conductive grounding sheath, and the conductive grounding sheath being surrounded by a protective outer jacket, said connector comprising:
>
> a. a tubular post having a first end adapted to be inserted into an exposed end of the coaxial cable around the dielectric thereof and under the conductive grounding sheath thereof, said tubular post having an opposing second end;
>
> b. a nut having a first end for rotatably engaging the second end of said tubular post and having an opposing second end with an internally threaded bore for threadedly engaging the threaded port;
>
> c. a cylindrical body member having a first end and a second end, the first end of said cylindrical body member including a cylindrical sleeve having an outer wall of a first diameter and an inner wall, the inner wall bounding a first central bore extending about said tubular post, the second end[19] of said cylindrical body member engaging said tubular post proximate the second end thereof, said cylindrical sleeve having an open rear end portion for receiving the outer jacket of the coaxial cable, said open rear end portion being deformable;
>
> d. a compression ring having first and second opposing ends and having a central passageway extending therethrough between the first and second ends thereof, the first end of said compression ring having a first constant diameter internal bore of a diameter commensurate with the first diameter of the outer wall of said cylindrical sleeve for allowing the first end of said compression ring to extend over the first end of said cylindrical body member, the central passageway of said compression ring including an

[19] The Certificate of Correction, dated May 6, 2003, replaces the word "send" with "end." (CX-2 at PPC-TRIAL-000073.)

inwardly tapered annular wall leading from the first internal bore and narrowing to a reduced diameter as compared with the first diameter; and

e. said inwardly tapered annular wall causing said rear end portion of said cylindrical sleeve to be deformed inwardly toward said tubular post and against the jacket of the coaxial cable as said compression ring is advanced axially over the cylindrical body member toward the second end of said cylindrical body member.

(CX-2 at PPC-TRIAL-000072.)

The parties do not dispute that all of the accused Fei Yu '194 Connectors meet the elements of claim 2 of the '194 patent. (CBr. at 25; SBr. at 23-24.[20]) Dr. Eldering testified that the accused Fei Yu '194 Connectors meet all of the elements of claim 2 of the '194 patent. (CBr. at 25; SBr. at 24; Tr. at 701:25-743:14 (Eldering).) PPC also submitted claim charts, sectioned physical samples, and photographs created by Dr. Eldering to show the claim elements identified by Dr. Eldering when he examined the physical samples of the Fei Yu '194 Connectors. (CBr. at 25; SBR. at 24; SFF 24-106 (undisputed); CFF III.A.8 (undisputed); CFF III.C.1.1-16 (undisputed); CFF III.C.1.18-20 (undisputed); CFF III.C.2.1-16 (undisputed); CFF III.2.18-20 (undisputed); CFF III.C.3.1-16 (undisputed); CFF III.C.3.18-20 (undisputed); CFF III.C.4.1-16 (undisputed); CFF III.C.4.18-20 (undisputed); CX-214; CX-217; CX-220; CX-221; CX-224-25; CDX-31; CDX-32; CDX-64; CPX-22, 25, 26, 29, 30, 37, 43-44.)

The Administrative Law Judge finds that the undisputed evidence shows that each of Defaulting Respondents' accused Fei Yu '194 Connectors is a coaxial cable connector with "a tubular post having a first end adapted to be inserted into an exposed end of [a] coaxial cable around the dielectric thereof and under the conductive grounding sheath thereof, said tubular post having an opposing second end," "a nut having a first end for rotatably engaging the second end of said tubular post and having an opposing second end with an internally threaded bore for

[20] Respondents' post-hearing briefs only relate to the '257 patent and do not address the '194 patent.

threadedly engaging the threaded port," "a cylindrical body member having a first end and a second end, the first end of said cylindrical body member including a cylindrical sleeve having an outer wall of a first diameter and an inner wall, the inner wall bounding a first central bore extending about said tubular post, the second end of said cylindrical body member engaging said tubular post proximate the second end thereof, said cylindrical sleeve having an open rear end portion for receiving the outer jacket of the coaxial cable, said open rear end portion being deformable," "a compression ring having first and second opposing ends and having a central passageway extending therethrough between the first and second ends thereof, the first end of said compression ring having a first constant diameter internal bore of a diameter commensurate with the first diameter of the outer wall of said cylindrical sleeve for allowing the first end of said compression ring to extend over the first end of said cylindrical body member, the central passageway of said compression ring including an inwardly tapered annular wall leading from the first internal bore and narrowing to a reduced diameter as compared with the first diameter," and "said inwardly tapered annular wall causing said rear end portion of said cylindrical sleeve to be deformed inwardly toward said tubular post and against the jacket of the coaxial cable as said compression ring is advanced axially over the cylindrical body member toward the second end of said cylindrical body member." Therefore, the Administrative Law Judge finds that PPC has provided substantial, reliable and probative proof to establish by a preponderance of the evidence that all of Defaulting Respondents' accused Fei Yu '194 Connectors listed in Section I.E. above literally infringe claim 2 of the '194 patent.

C. Analysis of the Accused Fu Ching and Fei Yu '257 Connectors with Respect to the '257 Patent.

PPC has accused Respondents and Defaulting Respondents of literal infringement of independent claim 1 and dependent claim 5 of the '257 patent by the importation, the sale for

importation or the sale after importation of the accused Fu Ching Connectors and the Fei Yu '257 Connectors in the United States. PPC does not assert infringement under the doctrine of equivalents.

1. Claim 1.

a) Literal Infringement, Respondents.

PPC argues that all of the accused Fu Ching Connectors identified in Section I.E. above meet all of the limitations of claim 1 of the '257 patent. The Fu Ching Connectors were evaluated to determine whether they met the limitations of the asserted claims of the '257 patent. Specifically, the accused Fu Ching Connectors were visually and microscopically inspected in various conditions, including as sectioned samples, to determine the presence of the claimed elements in the products. (CBr. at 45-46, 49; Tr. at 667:13-22, 1045:18-1122:10, 1160:7-1166:19, 1190:1-1192:3 (Eldering), 952:20-986:3 (Osswald); CFF IV.A.9 (undisputed); CFF IV.C.28.4-6 (undisputed); SFF 937-42 (undisputed); CX-228; CX-230-31; CX-235C; CX-246C-247C; CDX-28; CDX-37; CDX-39-40; CPX-33; CPX-35-36; CPX-47; CPX-60; CPX-66.) In particular, the accused Fu Ching Connectors and their specifications were evaluated to determine whether the locking members of the accused connectors were inseparably coupled to the connector bodies and whether a shoulder forms on the accused connectors when the collar restricts the locking members. (CBr. at 45; Tr. at 967:6-986:3 (Osswald), 491:6-492:8, 494:11-20, 495:9-518:11, (McElroy); CX-127C-128C; CX-132; CX-246C-247C; CPX-56; CPX-58; CPX-60; CPX-62; CPX-99-104.) The locking member of the Fu Ching Connectors was also inputted into computer first as a CAD model, and then into an ANSYS computer simulation to evaluate the performance of the connectors in accordance with the Fu Ching specifications. (Tr. at 976:23-985:8 (Osswald); CDX-37-38; CDX-41-42.) Furthermore, Respondents conceded at

the hearing or through admissions that the accused Fu Ching Connectors meet several limitations of the asserted claims of the '257 patent. (CFF IV.C.28.52-54 (undisputed); CFF IV.C.28.55 (undisputed by Respondents); CFF IV.28.84 (undisputed); CFF IV.C.28.87-88 (undisputed); CFF IV.C.90 (undisputed); CFF IV.C.92 (undisputed); CFF IV.C.96-97 (undisputed); ROCFF IV.C.28.50; Tr. at 1387:3-17 (Hsia).)

It is undisputed that all of the accused Fu Ching Connectors, regardless of fastener types, "are constructed the same with respect to the locking member attaching to the connector body (*i.e.*, the engagement means)." (CFF IV.C.28.11 (undisputed); SFF 915-16 (undisputed); Tr. at 125:10-13 (Horvack).) It is undisputed that "[e]xcept for the fastener means and dimensions/colors of components, all of the [accused Fu Ching Connectors] are constructed the same for purposes of determining infringement of the Szegda '257 patent, allowing an exemplary infringement analysis to be performed for all of the products for all claim elements other than fastener means." (CFF IV.C.28.12 (undisputed); SFF 915-18 (undisputed).)

(1) Preamble—*"An end connector for connecting a coaxial cable to a system component, said end connector comprising"*

The parties do not dispute that all of the accused Fu Ching Connectors meet the preamble of claim 1 of the '257 patent. (CFF IV.C.28.87 (undisputed); SFF 885 (undisputed). *See also* Tr. at 1094:1-5 (Eldering).) Respondents admit that each of the accused Fu Ching Connectors is "an end connector (10) for connecting a coaxial cable to a system component." (CFF IV.C.28.87 (undisputed); SFF 885 (undisputed); Fu Ching Response at ¶2.6.)

The Administrative Law Judge finds that the undisputed evidence shows that all of Respondents' accused Fu Ching Connectors are end connectors for connecting a coaxial cable to a system component. Therefore, the Administrative Law Judge finds that all of Respondents'

accused Fu Ching Connectors listed in Section I.E. above meet the preamble of claim 1 of the '257 patent that requires "[a]n end connector for connecting a coaxial cable to a system component[, said end connector comprising]."

> **(2) Element 'a'** – *"a connector body comprising a tubular inner post extending from a front end to a rear end, and including an outer collar surrounding and fixed relative to said inner post at a location disposed rearwardly of said front end, said outer collar cooperating in a radially spaced relationship with said inner post to define an annular chamber with a rear opening"*

The Administrative Law Judge has already found that a person of ordinary skill in the art would conclude that the words "an outer collar surrounding and fixed relative to said inner post" with respect to this portion of element 'a' of claim 1 have their plain and ordinary meaning and do not require an immobile outer collar. (*See* Section III.D.1 above.) Essentially, element 'a' requires the connector body to have a tubular inner post and an outer collar that surrounds and cooperates in a radially spaced relationship with the tubular inner post to make an annular chamber.

PPC argues that "the testimony from Dr. Eldering, Mr. McElroy, and Fu Ching's own President, [Ms.] Hsia,[21] all confirmed that the tubular inner post does not rotate or move independently of the outer collar in the [accused Fu Ching Connectors]." (CBr. at 65.)

Respondents rely on their claim construction position to argue that a photograph (RX-71C) shows that all of the accused Fu Ching Connectors have an outer collar of the connector body that is a separate structure from the inner post, allowing them to rotate independently of each other. (RBr. at 55.) According to Respondents, if the outer collar can rotate, it is not fixed relative to the inner post. (*Id.* at 55-56.)

[21] Based on PPC's citation to the hearing transcript, PPC is likely referring to Ms. Lan Chen "Jessie" Hsia and means to say Vice President here.

Staff does not include an infringement analysis with respect to element 'a' in the post-hearing briefing. (SBr. at 25-28; SRBr. at 2-6.)

As the Administrative Law Judge has found that element 'a' does not require an outer collar that cannot move in relationship to the inner post, there is little dispute that all of the Fu Ching Connectors have an outer collar surrounding and fixed relative to the tubular inner post. (CBr. at 65; RBr. at 55-56; SBr. at 25-28; Tr. at 1387:3-17 (Hsia); Fu Ching Response at ¶2.6. *See also* Tr. at 1094:6-1095:22 (Eldering).) Respondents further admit that each of the accused Fu Ching Connectors has "a connector body (22) comprising a tubular inner post (28) extending from a front end (28a) to a rear end (28b)." (CFF IV.C.28.88 (undisputed); Tr. at 1328:3-12 (Hsia); CX-201 at PPC-TRIAL-003212; CX-202 at PPC-TRIAL-003320-21. *See also* Tr. at 1094:6-1095:22 (Eldering).) In addition, it is undisputed that "[e]ach of the [accused Fu Ching Connectors] has an outer collar (30) cooperating in a radially spaced relationship with the inner post (28) to define an annular chamber (32) with a rear opening (34)." (CFF IV.C.28.90 (undisputed); CX-201 at PPC-TRIAL-003212-13; CX-202 at PPC-TRIAL-003320-21. *See also* Tr. at 1094:6-1095:22 (Eldering).)

The Administrative Law Judge finds that the undisputed evidence shows that each of Respondents' accused Fu Ching Connectors has a connector body comprising a tubular inner post extending from a front end to a rear end, and including an outer collar surrounding and fixed relative to said inner post at a location disposed rearwardly of said front end, said outer collar cooperating in a radially spaced relationship with said inner post to define an annular chamber with a rear opening. Therefore, the Administrative Law Judge finds that all of Respondents' accused Fu Ching Connectors listed in Section I.E. above meet element 'a' of claim 1 of the '257 patent.

(3) Element 'b' – *"fastener means at the front end of said inner post for attaching said end connector to said system component"*

The Administrative Law Judge has already found that a person of ordinary skill in the art would conclude that the function of "fastener means" is "attaching said end connector to said system component." The Administrative Law Judge further found that the corresponding structure of "fastener means" is cylindrical in shape, internally threaded, rotatable, and secured to the post of the end connector by way of an inner circular shoulder seated in a circular groove in the outer surface of the post at a location adjacent to the post's front end. In addition, the Administrative Law Judge found that the "fastener means" is not required to be a nut.

PPC argues that of the nine fastener types of the accused Fu Ching Connectors, the F-Connector Male has identical structure to that disclosed in the '257 patent. (CBr. at 63.) As for the other eight fastener types, PPC argues that each of these has an equivalent structure to the one set forth in the '257 patent specification. (*Id.* at 63-65.)

Respondents argue that the accused Fu Ching Connectors with a BNC, RCA, or female F-connector fastener are not structurally equivalent to the disclosure in the '257 patent, although Respondents appear to concede that the male F-connectors meet this claim element. (RBr. at 54-55.)

Staff argues that only the accused Fu Ching Connector models that have a nut as a fastener, namely the male F-connector, infringe the asserted claims of the '257 patent. (SBr. at 27.)

It is undisputed that the F-connector male fastener model, including the right angle male version, of the accused Fu Ching Connectors is a "fastener means." (CFF IV.C.28.52-54 (undisputed); Tr. at 1249:19-1251:20 (Eldering); Fu Ching Response at ¶2.6; *id.* at Ex. 36.)

Referring to the accused product list in Section I.E. above, this means that the following products meet element 'b' of claim 1 of the '257 patent:

Item #	Fu Ching Model No.	Gem Model No.	Fastener Type
1	FM1-710B1	0459-2CS	F Male
2	FM1-710A4	0406-6CS	F Male
3	FM1-710A5	0406-610CS	F Male
4	FM1-710A2	0406-6CSQS	F Male
5	FM1-710A2G	0406-6CSQSG	F Male
6	FM1-710A1	--	F Male
7	FM1-710A1G	--	F Male
8	FM1-710B2		F Male
14	FML1-710B1	0407-2CSTP	F Right Angle Male
15	FML1-710A4	0407-6CSTP	F Right Angle Male
16	FML1-710A5	0407-610CSTP	F Right Angle Male
17	FML1-710A2	0407-6CSQSTP	F Right Angle Male
18	FML1-710A1	--	F Right Angle Male

(CFF IC.C.28.9 (accused product chart excerpts).)

The Administrative Law Judge further finds that there is an "identity of claimed function"[22] between the BNC, RCA, and F-connector female fastener models and the function specified in element 'b' of claim 1 of the '257 patent. (CFF IV.C.28.55 (undisputed in relevant part); CFF IV.C.28.58 (undisputed in relevant part); CFF IV.C.61 (undisputed by Respondents); CFF IV.C.64 (undisputed in relevant part); CFF IV.C.67 (undisputed in relevant part); CFF IV.C.70 (undisputed by Respondents); CFF IV.C.73 (undisputed in relevant part); CFF IV.C.76 (undisputed); CFF IV.C.77-83 (undisputed by Respondents); Tr. at 1107:20-1108:23; 1161:24-1162:18 (Eldering) 1553:21-1554:15 (O'Neill); CDX-28; CX-201 at PPC-TRIAL-003213-14; CX-202 at PPC-TRIAL-003222.) The Administrative Law Judge further finds that all of the

[22] *See Minks*, 546 F.3d at 1378.

accused Fu Ching Connectors have fasteners attached to the front end of the inner tubular post. (Tr. at 1107:10-12 (Eldering); CX-201 at PPC-TRIAL-003213; CX-202 at PPC-TRIAL-003222.)

At issue here is, with respect to the portion that joins to a system component, whether the BNC, RCA, and F-connector female fastener models of the accused Fu Ching Connectors have equivalent structure to the fastener disclosed in the '257 patent specification. (CBr. at 63-65; RBr. at 54-55, SBr. at 27.) *See also Valmont Industries, Inc. v. Reinke Manuf. Co., Inc.*, 983 F.2d 1039, 1042 (Fed. Cir. 1993). The parties agree that there is a difference in physical structure. The fastener structure disclosed in the '257 specification is internally threaded. The F-connector female fastener models of the accused Fu Ching Connectors are externally threaded, and the Administrative Law Judge finds that these do not perform the function of connecting the end connector to the system component in the same way as the internally threaded, independently rotatable male F-connector models. (CPX-47.) Furthermore, the male and female RCA and BNC connectors require a push, or a push and partial twist-lock motion of 90-180 degrees, in order to perform the function of connecting the end connector to the system component. (*See e.g.*, Tr. at 1257:12-1259:25, 1261:21-1264:1 (Eldering); CPX-47.) The Administrative Law Judge finds that the male and female RCA and BNC connector models do not perform the function of connecting the end connector to the system component in the same way as the structure disclosed in the '257 patent specification. As a result of this finding, the female F-connector models and the RCA and BNC connectors do not meet element 'b' of claim 1 of the '257 patent because they do not perform in the same way as the structure disclosed in the '257 patent. *Minks*, 546 F.3d at 1378; *Valmont*, 983 F.2d at 1044. However, the Administrative

Law Judge will finish the equivalence test for literal infringement for these models[23] to address the arguments made by the parties.

With respect to result, the parties agree that the F-connector male achieves the same result as the structure disclosed in the '257 patent specification because the "connector and cable assembly remain mechanically and electrically attached." (CFF IV.C.28.51 (undisputed); CFF IV.C.28.54 (undisputed).) Like the male F-connectors, each of the F-connector female and the male and female RCA and BNC connectors achieve substantially the same result as the structure disclosed in the '257 patent specification, because the "connector and cable assembly remain mechanically and electrically attached." Respondents admit that this is the case. (ROCFF IV.C.28.57; ROCFF IV.C.28.60; ROCFF IV.C.28.63; ROCFF IV.C.28.66; ROCFF IV.C.28.69; ROCFF IV.C.28.72; ROCFF IV.C.28.75. *See also* 1553:21-1554:15 (O'Neil).) Staff objects to the same findings of fact with respect to the female F-connector and the male and female RCA and BNC connectors, claiming they are "against the weight of the evidence." However, Staff provides no discussion or support for this opinion. (*See* SOCFF IV.C.28.57; SOCFF IV.C.28.60; SOCFF IV.C.28.63; SOCFF IV.C.28.66; SOCFF IV.C.28.69; SOCFF IV.C.28.72; SOCFF IV.C.28.75.) The Administrative Law Judge finds that the accused Fu Ching F-connector female and the male and female RCA and BNC connectors achieve substantially the same result as the structure disclosed in the '257 patent specification.

Based on the above analysis, the Administrative Law Judge finds that of the accused Fu Ching Connectors, only the male F-connectors meet element 'b' of claim 1 of the '257 patent that requires "fastener means at the front end of said inner post for attaching said end connector to said system component."

---

[23] *See Minks*, 546 F.3d at 1379 ([O]nce identity of function is established, the test for infringement is whether the structure of the accused device performs in substantially the same way to achieve substantially the same result as the structure disclosed in the . . . patent.).

(4) Element 'c' – *"a tubular locking member protruding axially into said annular chamber through said rear opening"*

The parties do not dispute that all of the accused Fu Ching Connectors meet element 'c' of claim 1 of the '257 patent. (CFF IV.C.28.92 (undisputed).) Respondents admit that the accused Fu Ching Connectors have "a tubular locking member (26) protruding axially into the annular chamber (32) through the rear opening (34)." (CFF IV.C.28.92 (undisputed). *See also* Fu Ching Response at ¶2.6; CX-201 at PPC-TRIAL-003214-15; CX-202 at PPC-TRIAL-003222-23.)

The Administrative Law Judge finds that the undisputed evidence shows that all of Respondents' accused Fu Ching Connectors have a tubular locking member protruding axially into the annular chamber through the rear opening. Therefore, the Administrative Law Judge finds that all of Respondents' accused Fu Ching Connectors listed in Section I.E. above meet element 'c' of claim 1 of the '257 patent that requires "a tubular locking member protruding axially into said annular chamber through said rear opening."

(5) Element 'd' – *"engagement means circumscribing the interior of said outer collar and the exterior of said locking member, said engagement means coacting in circular interengagement to inseparably couple said locking member to said connector body at a first position and to accommodate limited axial movement of said locking member relative to said connector body between said first position and a second position, said locking member coacting in a first radially spaced relationship with said inner post when in said first position to accommodate insertion of the rear end of said inner post into an end of said cable, with a central core portion of said cable being received in said inner post through said rear end and an outer annular portion of said cable being received in said annular chamber through said rear opening and between said locking member and said inner post, and said locking member coacting in a second radially spaced relationship with said inner post when in said second position to grip the outer annular portion of said cable therebetween"*

All of the accused Fu Ching Connectors are constructed the same with respect to the way in which the locking members attach to the connector bodies ("engagement means").

The Administrative Law Judge has determined that a person of ordinary skill in the art would construe "engagement means" as follows: "A first radially protruding circular shoulder (50a) having a generally perpendicular rear face and an inclined ramp-like front face circumscribes the exterior of the locking member (26) and coacts in circular interengagement with an internal groove (52) circumscribing the interior of the outer collar."

Dr. Tim A. Osswald, an expert in plastics (polymer processing) (Tr. at 943), testified on behalf of PPC that he had examined samples of the accused Fu Ching Connectors and the manufacturing drawings for making them. He testified that, as manufactured, the plastic portion of the locking members had a mostly smooth exterior (*see* Tr. at 1024) {

}. (Tr. at 1010.) {

}. (Tr. at 968, 1010.) He was able to detach and separate the locking members from the connector bodies in the course of examining of the connectors. He did not say how he disassembled them or whether he had to use any tools to do so, but he did testify that he had to use force. He did not measure the amount of force needed. (Tr. at 962, 1000.) However, he said he was able to reassemble connector components, and when he did, he could detect a click or snap when he put the two components back together. (Tr. at 999.)

According to Osswald, although the locking members were manufactured without a shoulder, when a locking member is inserted into a connector body, the part of its plastic material that comes in contact with the inside of the connector body is compressed {

}. (Tr. at 1010.) Only a narrow portion of the interior of the metal connector had { }, and this creates what

Osswald describes as a compression hoop effect on the plastic material of the locking member. (CX-127C-PPC-TRIAL-002495.)

One aspect of this effect is that the plastic material of the locking member on either side of the metal collar of the connector body tends to flare outward in relation to the portion of plastic that is under the collar. Dr. Osswald testified that the non-compressed plastic tends to return to its manufactured diametrical state as it is released from the compression-producing hoop in the course of the locking member being inserted into the connector body. (Tr. at 956.)

Dr. Osswald describes the portion of plastic (polyacetal polymer, copolymer) that "flares out" (Tr. at 955-56) or "swings out" (Tr. at 957) as a "shoulder." What he describes as a shoulder is actually the exterior of the locking member on either side of the collar. (Tr. at 958, 1040.) He concludes that a corner of the metal collar digs into the tubular locking member forming a 'nearly vertical wall" thereby making it hard to move the locking member axially: restricting axial movement, "practically putting it into a locked position at that point." (Tr. at 958-59.) Elsewhere in his testimony, he says that the "vertical wall" makes the locking member and connector body "nearly inseparable." (Tr. at 949.)

What Dr. Osswald calls a "nearly vertical wall" is shown in illustrations he prepared. (CDX-37 and 38.) In CDX-38, the "nearly vertical wall" he describes (an ambiguous term) is the portion of the blue colored area that touches the collar, shown in pink. (Tr. at 979-81.) He did not calculate how far the metal corner of the connector body digs into the plastic of the locking member. (Tr. at 1014.)

According to PPC, the shoulder described by Dr. Osswald satisfies one element of the structure that corresponds to "engagement means" in claim 1 of the '257 patent, and the interior portion of the connector body, next to the part that makes up the collar or hoop, forms a groove,

and this, according to PPC, satisfies the other element of the corresponding structure in the '257 patent that constitutes the engagement means of claim 1. (CBr. at 51-54.)

Literal infringement of a claim limitation in means-plus-function format requires that the relevant structure in the accused device perform the identical function recited in the claim and be identical or equivalent to the corresponding structure in the specification. *Applied Med. Resources Corp. v. United States Surgical Corp.,* 448 F.3d 1324, 1333. (Fed. Cir. 2006). The corresponding structure of the '257 patent that satisfies all the elements of claim 1 has been construed as follows: A first radially protruding circular shoulder (50a) having a generally perpendicular rear face and an inclined ramp-like front face circumscribes the exterior of the locking member (26) and coacts in circular interengagement with an internal groove (52) circumscribing the interior of the outer collar (30). The accused Fu Ching Connectors do not have a circular shoulder that radially protrudes from the exterior of the locking member. The shoulder described by Dr. Osswald does not protrude from the "exterior" or "surface" of the locking member.

The shoulders that Dr. Osswald describes, which are formed when the locking member is in a first position in relation to the connector body, do not protrude from the exterior, or surface, of the locking member, as do the shoulders of the '257 patent. This is demonstrated in a portion of Dr. Osswald's testimony:

> Q. And is it your testimony that that's – after it's inserted into the connector body, something actually protrudes out radially from the locking member?
> A. Yes. It protrudes out from – outwards from the position of its deformation. So it tends to go to its original diameter.
> Q. Let me ask you in a particular way. Is there a piece of material, a piece of polymer plastic that begins to protrude out radially from the locking member? Or is it just simply deforming back to its original position?
> A. It deforms back to its original position.
> Q. So a plastic piece of polymer doesn't grow out from the locking member under your theory of how the Gem/Fu Ching connector works; is that right?

A. It does not.

(Tr. at 1003-04.) Since plastic is soft, compliant, and almost flows (Tr. at 1014), according to Dr. Osswald, it has a tendency to resume its normal dimensions once a compressing force has been removed. The shoulders he describes, which form by virtue of that characteristic of plastic, protrude only at the lateral points of the depressed area of the locking member created by the cincture of the connector body, or collar, as referred to by Dr. Osswald. (Tr. at 976.)

There is another point of difference with respect to the engagement means of element 'd' of claim 1 of the '257 patent and the Fu Ching Connectors. According to Dr. Osswald, there are two shoulders formed when the locking member of the Fu Ching Connector is inserted into the connector body: one on either side of the collar. (Tr. at 956, 957, 976-977, 1040.) The formation of these shoulders, coupled with the fact that a corner of the collar digs into the plastic of the locking member, "virtually" locks the two components together. (Tr. at 957-58, 1005, 1013-14.) It creates a "locked in" position between the two. (Tr. at 979.) Although the engagement means for the '257 patent "inseparably couples" the locking member to the connector body, it also "accommodates" limited axial movement of the locking member relative to the connector body between the first and a second position. Dr. Osswald's testimony, does not reveal that the engagement means of the Fu Ching locking member fulfills the second function of element 'd' of claim 1 of the '257 patent: accommodating limited axial movement of the locking member between the first and a second position.

Although Dr. Osswald testified that the shoulder (the rear one, that is) that is formed when the Fu Ching locking member is inserted into the connector body is "virtually vertical," neither his testimony nor any other evidence establishes that the rear face of that shoulder is generally perpendicular or that the front face is ramp-like. In fact, Dr. Osswald's demonstrative

illustrations (*see* CX-37, 38) disclose a shoulder with only one face, which is not "generally perpendicular," although it could be described as "ramp-like."

The structure of the Fu Ching Connector does not perform the function of the '257 Patent.

Inseparably Couple.

The term "inseparably couple" has been construed by the Administrative Law Judge as follows: the locking member does not completely and fully separate or detach from the connector body prior to and during installation. (*See* Section III.D.3. above.)

During the hearing, PPC offered testimony by Mr. Dale McElroy[24] that the Fu Ching Connectors are inseparably coupled, according to his perspective as an expert in the field of coaxial cable connector installation. (Tr. at 482-85.) His opinions were based on tests he conducted on samples of the accused Fu Ching Connectors. (Tr. at 491-492.) He removed several handfuls of the connectors from various bags containing different models and tested them in various ways. (*See e.g.* Tr. at 494, 505, 514-15.) He rolled some of them in his hands, squeezed, dropped bags of them on the witness stand, and with a few, attempted to pull the locking members from the connector bodies they were attached to. (*See e.g.* Tr. at 493-499.)

Based on his testing techniques, which he considers representative of the kind and amount of force connectors are generally subjected to, he opined that the accused Fu Ching Connectors he tested were inseparably coupled because they did not come apart when he did these things during his testimony. (*See e.g.* Tr. at 493-499.) Although in one instance a locking member separated when he pulled on it with his bare hands, he testified that, normally, an installer of a one-piece connector would not try to separate the locking member from the body of

[24] Mr. McElroy is an applications engineer at PPC and PPC's expert witness in the field of coaxial cable connector installation. (Tr. at 467, 482-85.)

the connector and, thus, the locking member would not be exposed the force he applied. (Tr. at 505-506.)

In opposition, Mr. William O'Neil, Jr. testified that, based on his experience as Gem's Vice-President of Operations, the locking members of the Fu Ching Connectors do separate during shipping, storage, and installation. (Tr. at 1508-10.) According to him, locking members of the Fu Ching Connectors have been found separated and detached from their connector bodies in shipments received by Gem from Fu Ching. (Tr. at 1508-09.) He testified that about one percent of the connectors received by Gem from Fu Ching are separated, and this is a continuous occurrence. (Tr. at 1509.) When it happens, someone at Gem simply "pops" the dislodged locking members back on the connector bodies. (Tr. at 1510.) Also, the locking members sometimes separate afterwards, during shipment by Gem to its own customers, after an initial inspection by Gem. (Tr. at 1508, 1511, 1514-15.) When Gem receives notice that this has happened from a customer, Gem will tell the customer to simply push the locking member back on the connector body with their hands. If that is not satisfactory to the customer, Gem will instead replace the connector. (Tr. at 1515.)

O'Neil also testified that the locking members of the accused Fu Ching Connectors are occasionally deliberately removed from the connector bodies during inspection and installation by Gem, usually by hand, otherwise, with pliers. (Tr. at 1520.) Sometimes Gem substitutes the locking member of one connector for the missing one of another. (Tr. at 1519.)

Although the Fu Ching Connectors do not have instructions for separating the locking members from the connector bodies they are attached to, and according to Mr. O'Neil, will not work properly if the connector is being installed on cable when the locking member is separated (Tr. at 1596), the locking members sometimes simply pop off in the course of being installed on

cables, in which case, according to Mr. O'Neil, they can simply be reattached by hand. (Tr. 1517-18, 1522.)

Ms. Jessie Hsia, Fu Ching's Vice President, also testified that the locking members of the accused Fu Ching Connectors are detachable by hand and that she has done this many times, never having had to use a tool to do so. (Tr. 1357-59.)

Although PPC, in its reply brief (CRBr. at 43, nn.17, 18), denigrates Ms. Hsia's testimony as uncorroborated because she did not, while she was on the witness stand, demonstrate her facility in detaching the locking members, by the same token, neither PPC nor Staff challenged Ms. Hsia or Mr. O'Neil during cross-examination to demonstrate their ability to separate the Fu Ching Connectors using samples from the same packets that were used during Mr. McElroy's testimony, and their respective testimony in that regard is uncontradicted.

On the other hand, there was no evidence presented at the hearing that PPC's CMP connectors, which (as discussed below) practice the '257 patent, ever separate, under any circumstance. Every indication from the evidence is that these PPC CMP connectors do not separate, either during shipment, storage, handling, or installation on cable. The evidence in the record offers no opportunity for the fact finder to infer that PPC's CMP connectors separate or detach at all, not even one percent of the time, or that it is "normal and ordinary" for PPC's compression connectors to occasionally separate or detach during storage or shipment, as the Fu Ching Connectors sometimes do; or that the locking members sometimes pop off, as the Fu Ching Connectors do; or that the locking members can be detached in order to substitute them for a missing locking member on a different kind of connector, as is done with the accused Fu Ching Connectors. From all of the evidence in this Investigation, it appears that PPC's CMP

connectors literally are inseparable, because the locking member does not separate or detach from the connector body prior to or during installation on cable.

The accused Fu Ching Connectors do not fulfill the "inseparably couple" limitation of element 'd' of claim 1, as they have locking members that are separable or detachable. In this respect, the accused Fu Ching Connectors are like the Snap-N-Seal connectors of Thomas & Betts, which were found non-infringing because they were detachable. Although PPC and Staff point to the fact that Thomas & Betts's installation instructions include information on how to separate its locking members from their connector bodies and Fu Ching's instructions do not, this is no more a distinguishing factor than is the fact that the '257 patent claims that the function of the engagement means of its connector is to "inseparably couple" and Fu Ching's patent does not. The issue in each instance is not what the manufacturer's instructions say, but whether their accused connectors meet all of the limitations of the '257 patent. In both instances, the accused locking members are detachable: the Thomas & Betts Snap-N-Seal one-piece connector, by the installer intentionally snapping them apart, although that is only an option, and not a necessity if the installer prefers to install the connector on a cable in one piece (*see* Summary Judgment Order at 7, n.4, 8); the Fu Ching Connector inadvertently and occasionally under normal and ordinary forces during shipping, storage, and handling, as well as intentionally by the installer, for various reasons.

PPC, citing to *Hilgraeve Corp., Symantec*, 265 F.3d 1336 (Fed. Cir. 2001) and similar cases, argues that infringement of an accused product should be determined based on normal and ordinary usage of the accused product. (CBr. at 24.) However, according to Mr. O'Neil, the locking members of Fu Ching Connectors do, in fact, separate during normal and ordinary shipping and storage, and during installation, as discussed above. PPC counters with the

argument that this happens only one percent of the time (although this refers to shipments received by Gem from Fu Ching and does not take into account the percentage of separations during shipments from Gem to its customers); however, according to the '257 patent specification, inseparability applies "to all cases," and this should certainly be true when connectors are subject to "normal and ordinary forces." Therefore, the infrequency with which the Fu Ching Connectors separate does not alter the fact that they do not "in all cases" remain inseparably coupled. Although PPC contends that the separated connectors were broken (CRBr. at 44), Mr. O'Neil testified that they were not defective and that they can simply be re-attached (Tr. at 1600).

The only instance that PPC can point to where the Fu Ching Connectors have separated due to forces which it says are not normal are when an installer or someone at Gem intentionally detaches the locking member. According to PPC, locking members should not be detached from connector bodies. (CRBr. at 42.) While this is true with respect to the '257 patent, it is not true of all connectors. The locking member of the Samchisen connector has to be detached from the connector body during installation (JX-1 at 1:60-63), and according to the Summary Judgment Order in the Thomas & Betts case, the Snap-N-Seal locking member can be detached or not to facilitate installation according to the installer's judgment. *See* Summary Judgment Order at 7, n.4, 8. For the foregoing reasons, the Administrative Law Judge concludes that the accused Fu Ching Connectors do not "inseparably couple" their locking members to their connectors bodies and for this reason do not infringe the '257 patent.

<u>Accommodate Limited Axial Movement</u>.

The construed function of the engagement means is to inseparably couple the locking member to the connector body at a first position and to accommodate limited axial movement of

the locking member relative to the connector body between the first position and a second position. Since there are two functions, the structure of the accused Fu Ching Connectors must satisfy both of those functions.

Dr. Osswald testified that the accused Fu Ching Connectors, after the locking members have been inserted into the connector bodies, form protruding shoulders, because the collar depresses the plastic in the locking member that it comes in contact with, "practically putting it into a locked position" at that point. (Tr. at 958.) He testified that the locking member is "locked" into this position in two ways: (i) a right-angle corner of the metal collar digs into the flaring plastic that protrudes from the depression; and (ii) the shoulders that form on either side of the collar by reason of the flaring of the plastic. (Tr. at 956-59.) Dr. Osswald testified that, to him, the term "inseparably couple" means that the locking member is hard to remove by force; force is needed to remove the locking member. (Tr. at 991.) Dr. Osswald is not an expert in the technology of cable compression connectors. (Tr. at 943.) Dr. Osswald did not testify that the engagement means of the accused Fu Ching Connectors he examined were accommodated with respect to axial movement between the first and second position relative to the connector body. In fact, his testimony that the locking member and connector body were virtually locked at the first position, belies the conclusion that the structure of the accused Fu Ching Connectors performs the function described in claim 1 of the '257 patent. (Tr. at 956-58, 979.)

Dr. Eldering testified that in forming his opinion, he relied on Dr. Osswald's analysis with respect to engagement means. (Tr. at 1046.) Dr. Eldering relied on Dr. Osswald's examination of the components, particularly the plastic component and the formation of the shoulder and rear face. (Tr. at 1047.) Dr. Eldering is not a plastic expert. (Tr. at 1208.) During his testimony, Dr. Eldering did not explain the structure by which the accused Fu Ching

Connectors accommodates limited axial movement of the locking member relative to the connector body between the first and a second position. (*See* Tr. 1089-1102.) There is no explanation by Dr. Eldering of how he reconciles the conclusion in his claim chart (*see* CDX-28) with respect to the accommodation of limited axial movement of the locking member and Dr. Osswald's testimony that the locking member and the connector body were either locked or virtually locked at the first position between the two shoulders formed by compression hoop effect of the collar.

For these reasons, the Administrative Law Judge concludes that there is not a preponderance of evidence showing that the accused Fu Ching Connectors meet the limitation of element 'd' of claim 1 of the '257 patent for accommodation of limited axial movement of the locking member relative to the connector body from the first to a second position.

With respect to the remainder of the engagement means limitation, Dr. Eldering testified that they were met. (Tr. 1102-05.) Respondents have not adduced evidence contradictory of Dr. Eldering's conclusions with respect to the remaining portions of the engagement means limitation within element 'd' of claim 1. For these reasons, the Administrative Law Judge finds that accused Fu Ching Connectors satisfy the remaining portions of element 'd' of claim 1 of the '257 patent.

Conclusion.

As discussed above, the evidence shows that all of Respondents' accused Fu Ching Connectors meet the preamble and elements 'a' and 'c' of claim 1. In addition the male F-connector models of the accused Fu Ching Connectors meet element 'b' of claim 1. However, none of the accused Fu Ching Connectors meet all of the claim limitations of element 'd' of claim 1 of the '257 patent. Therefore the Administrative Law Judge finds that the accused Fu

Ching Connectors do not meet all of the limitations of claim 1 of the '257 patent and that none of Respondents' accused Fu Ching Connectors literally infringe claim 1 of the '257 patent.

b) Literal Infringement, Defaulting Respondents.

PPC argues that all of the accused Fei Yu '257 Connectors identified in Section I.E. above meet all of the limitations of claim 1 of the '257 patent. Defaulting Respondents' Fei Yu '257 Connectors were evaluated to determine whether they meet the limitations of the asserted claims of the '257 patent. Specifically, the accused Fei Yu '257 Connectors were visually inspected in various conditions, including as sectioned samples, to determine the presence of the claimed elements in the products. (CBr. at 45-46; Tr. at 667:13-22, 848:4-862:12 (Eldering); CX-219; CX-222-23; CDX-29; CPX-24; CPX-27-28; CPX-39; CPX-41-42.)

(1) Preamble—*"An end connector for connecting a coaxial cable to a system component, said end connector comprising"*

The parties do not dispute that all of the accused Fei Yu '257 Connectors meet the preamble of claim 1 of the '257 patent. (CFF IV.C.1.3 (undisputed); CFF IV.C.2.3 (undisputed); CFF IV.C.3.3 (undisputed).) The Administrative Law Judge finds that the undisputed evidence shows that each of Defaulting Respondents' accused Fei Yu '257 Connectors is an end connector for connecting a coaxial cable to a system component. (*See id.*; CDX-29. *See also* Tr. at 849:1-7, 855:7-19, 858:22-859:13 (Eldering).) Therefore, the Administrative Law Judge finds that all of Defaulting Respondents' accused Fei Yu '257 Connectors listed in Section I.E. above meet the preamble of claim 1 of the '257 patent that requires "[a]n end connector for connecting a coaxial cable to a system component[, said end connector comprising]."

> **(2) Element 'a'** – *"a connector body comprising a tubular inner post extending from a front end to a rear end, and including an outer collar surrounding and fixed relative to said inner post at a location disposed rearwardly of said front end, said outer collar cooperating in a radially spaced relationship with said inner post to define an annular chamber with a rear opening"*

The Administrative Law Judge has already found that a person of ordinary skill in the art would conclude that the words "an outer collar surrounding and fixed relative to said inner post" with respect to this portion of element 'a' of claim 1 have their plain and ordinary meaning and do not require an immobile outer collar. (*See* Section III.D.1 above.) Essentially, element 'a' requires the connector body to have a tubular inner post and an outer collar that surrounds and cooperates in a radially spaced relationship with the tubular inner post to make an annular chamber.

The Administrative Law Judge finds that the undisputed evidence shows that each of Defaulting Respondents' accused Fei Yu '257 Connectors has a connector body with a tubular inner post and an outer collar that surrounds and cooperates in a radially spaced relationship with the tubular inner post to make an annular chamber. (CFF IV.C.1.4-6 (undisputed); CFF IV.C.2.4-6 (undisputed); CFF IV.C.3.4-6 (undisputed); CDX-29. *See also* Tr. at 849:1-7, 855:7-19, 858:22-859:13 (Eldering).) Therefore, the Administrative Law Judge finds that all of Defaulting Respondents' accused Fei Yu '257 Connectors listed in Section I.E. above meet element 'a' of claim 1 of the '257 patent that requires "a connector body comprising a tubular inner post extending from a front end to a rear end, and including an outer collar surrounding and fixed relative to said inner post at a location disposed rearwardly of said front end, said outer collar cooperating in a radially spaced relationship with said inner post to define an annular chamber with a rear opening."

(3) Element 'b' – *"fastener means at the front end of said inner post for attaching said end connector to said system component"*

The Administrative Law Judge has already found that a person of ordinary skill in the art would conclude that the function of "fastener means" is "attaching said end connector to said system component." The Administrative Law Judge further found that the corresponding structure of "fastener means" is cylindrical in shape, internally threaded, rotatable, and secured to the post of the end connector by way of an inner circular shoulder seated in a circular groove in the outer surface of the post at a location adjacent to the post's front end. In addition, the Administrative Law Judge found that the "fastener means" is not required be a nut.

The Administrative Law Judge finds that the undisputed evidence shows that each of Defaulting Respondents' accused Fei Yu '257 Connectors has a cylindrically shaped, internally threaded fastener (F-connector male) that attaches the end connector to a system component. (CFF IV.C.1.7 (undisputed); CFF IV.C.2.7 (undisputed); CFF IV.C.3.7 (undisputed); CDX-29; Tr. at 852:21-853:1; 858:1-4; 861:15-18 (Eldering). *See also* Tr. at 849:1-7, 855:7-19, 858:22-859:13 (Eldering).) Therefore, the Administrative Law Judge finds that all of Defaulting Respondents' accused Fei Yu '257 Connectors listed in Section I.E. above meet element 'b' of claim 1 of the '257 patent that requires a "fastener means at the front end of said inner post for attaching said end connector to said system component."

(4) Element 'c' – *"a tubular locking member protruding axially into said annular chamber through said rear opening"*

The parties do not dispute that all of the Defaulting Respondents' accused Fei Yu '257 Connectors meet element 'c' of claim 1 of the '257 patent. (CFF IV.C.1.8 (undisputed); CFF IV.C.2.8 (undisputed); CFF IV.C.3.8 (undisputed).) The Administrative Law Judge finds that

the undisputed evidence shows that each of Defaulting Respondents' accused Fei Yu '257 Connectors has a tubular locking member protruding axially into the annular chamber through the rear opening. (*Id.*; CDX-29. *See also* Tr. at 849:1-7, 855:7-19, 858:22-859:13 (Eldering).) Therefore, the Administrative Law Judge finds that all of Defaulting Respondents' accused Fei Yu '257 Connectors listed in Section I.E. above meet element 'c' of claim 1 of the '257 patent that requires "a tubular locking member protruding axially into said annular chamber through said rear opening."

> **(5) Element 'd'** – *"engagement means circumscribing the interior of said outer collar and the exterior of said locking member, said engagement means coacting in circular interengagement to inseparably couple said locking member to said connector body at a first position and to accommodate limited axial movement of said locking member relative to said connector body between said first position and a second position, said locking member coacting in a first radially spaced relationship with said inner post when in said first position to accommodate insertion of the rear end of said inner post into an end of said cable, with a central core portion of said cable being received in said inner post through said rear end and an outer annular portion of said cable being received in said annular chamber through said rear opening and between said locking member and said inner post, and said locking member coacting in a second radially spaced relationship with said inner post when in said second position to grip the outer annular portion of said cable therebetween"*

Dr. Eldering testified that based on his examination of the Fei Yu '257 Connectors, in light of the '257 patent, these connectors have engagement means circumscribing the interior of their outer collars and the exteriors of their locking members. Their engagement means coact in circular interengagement to inseparably couple the locking members to the connector bodies at a first position and to accommodate limited axial movement of the locking members relative to the connector bodies between the first and second positions. (Tr. at 521-22, 827-28, 848, 851-4, 857, 1173; CDX-29; CPX-39; CX-219, CX-222, CX-223.)

The locking members of the Fei Yu '257 Connectors also coact in a first radially spaced relationship with the inner posts when the first position to accommodate insertion of the rear ends of their inner posts into ends of cables, with central core portions of the cables being received into the inner posts through the rear ends and outer annular portions of the cables being received in the annular chambers through the rear openings and between the locking members and inner posts . (Tr. at 851-2, 857, 861; CDX-29,-65; CPX-24,CPX-27, CPX-28, CPX-39; CX-219; CX-222.)

The locking members of the Fei Yu '257 Connectors also coact in a secondly radial spaced relationship with the inner posts when in the second position, to grip the outer annular portion of the cable there between. These connectors have annular chambers that are closed at the first end by flanges extending radially between the inner posts and outer collars. Their locking members remain inseparably coupled before and during installation. (Tr. at 851-2, 857, 861, 940-41; CDX-29,-65; CPX-27; CPX -39; CPX-41; CPX-42.) None of this evidence has been disputed. (CFF IV.C.1.9-12 (undisputed); CFF IV.C.1.14 (undisputed); CFF IV.C.2.9-12 (undisputed); CFF IV.C.2.14 (undisputed); CFF IV.C.3.9-12 (undisputed); CFF IV.C.3.14 (undisputed).) The Administrative Law Judge concludes that the evidence is sufficient for a finding that the accused Fei Yu '257 Connectors satisfy the engagement means portion of element 'd' of claim 1 of the '257 patent.

Conclusion.

As discussed above, the accused Fei Yu '257 Connectors meet all of the claim limitations of claim 1 of the '257 patent. Therefore, the Administrative Law Judge finds that all of Defaulting Respondents' accused Fei Yu '257 Connectors literally infringe claim 1 of the '257 patent.

2. **Claim 5** – *"The end connector of claim 1 wherein said annular chamber is closed at a first end by a circular flange extending radially between said inner post and said outer collar."*

Claim 5 depends on independent claim 1 of the '257 patent. Inasmuch as each claim limitation must be present in an accused device in order for infringement to be found (either literally or under the doctrine of equivalents), an accused product cannot infringe a dependent claim if it does not practice every limitation of the independent claim from which it depends. *See Monsanto Co. v. Syngenta Seeds, Inc.*, 503 F.3d 1352, 1359 (Fed. Cir. 2007); *Warner-Jenkinson Co., Inc. v. Hilton Davis Chemical Co.*, 520 U.S. 17, 40 (1997). Furthermore, the Federal Circuit has explained:

> One may infringe an independent claim and not infringe a claim dependent on that claim. The reverse is not true. One who does not infringe an independent claim cannot infringe a claim dependent on (and thus containing all the limitations of) that claim.

Wahpeton Canvas Co., Inc. v. Frontier, Inc., 870 F.2d 1546, 1552 n.9 (Fed.Cir.1989) (citing *Teledyne McCormick Selph v. United States*, 558 F.2d 1000, 1004 (Ct .Cl. 1977)).

As noted above, none of the accused Fu Ching Connectors have been found to literally infringe independent claim 1 of the '257 patent. (*See* Section IV.C.1.a) above.) Therefore, the Administrative Law Judge finds that the accused Fu Ching Connectors do not infringe dependent claim 5.[25]

The Administrative Law Judge further found that all of the accused Fei Yu '257 Connectors infringe independent claim 1 of the '257 patent. (*See* Section IV.C.1.b) above.) Therefore, the Administrative Law Judge must now determine whether those accused Fei Yu

[25] However, it should be noted that the parties do not dispute that if Respondents' accused Fu Ching Connectors were to meet claim 1 of the '257 patent they would also meet the limitations of claim 5 of the '257 patent. It is undisputed that each of the Fu Ching Connectors "has an annular chamber (32) that is closed at a first end by a circular flange (36) extending radially between said inner post (28) and said outer collar (30)." (CFF IV.C.28.97 (undisputed); CDX-28; Tr. at 1104:15-1105:7 (Eldering).)

'257 Connectors that infringe independent claim 1 infringe dependent claim 5 as well. PPC asserts that all of the accused Fei Yu '257 Connectors infringe claim 5 of the '257 patent. (CBr. at 46-47.)

The Administrative Law Judge finds that the undisputed evidence shows that the annular chamber of Defaulting Respondents' Fei Yu '257 Connectors is closed at a first end by a circular flange extending radially between said inner post and said outer collar and therefore the Fei Yu '257 Connectors meet the limitation of claim 5 that requires "[t]he end connector of claim 1 wherein said annular chamber is closed at a first end by a circular flange extending radially between said inner post and said outer collar." (Tr. at 852:4-10, 855:7-14, 859:3-13 (Eldering); CFF IV.C.1.13 (undisputed); CFF IV.C.2.13 (undisputed); CFF IV.C.3.13 (undisputed); CX-219; CX-222; CX-223; CDX-29; CPX-24; CPX-27; CPX-28; CPX-39; CPX-41; CPX-42.) Accordingly the Administrative Law Judge finds that the Fei Yu '257 Connectors identified in Section I.E. above literally infringe claim 5 of the '257 patent.

D. Analysis of the Accused Fei Yu Model 043 with Respect to the '539 Patent.

PPC accuses Fei Yu Model 043 of infringing the sole claim of the '539 patent. The '539 patent claim reads: "[t]he ornamental design for a closed compression-type coaxial cable connector, as shown and described." (CX-3 at PPC-TRIAL-000075.) The '539 patent discloses four figures, along with their descriptions. In support of its assertion that the Fei Yu Model 043 design infringes the '539 patent, PPC has submitted a side by side comparison of one of the figures of the '529 patent and the accused product, with certain physical features labeled (reproduced below). (CBr at 87.) In addition, PPC provides testimony and a comparison chart by an "ordinary observer," Dr. Eldering. (Tr. at 680:21-687:25; CDX-36; CPX-44; CPX-96.)

According to PPC's "ordinary observer," the two designs are substantially the same. (Tr. at 685:19-686:1.)

Montena '539	Fei Yu Model 043
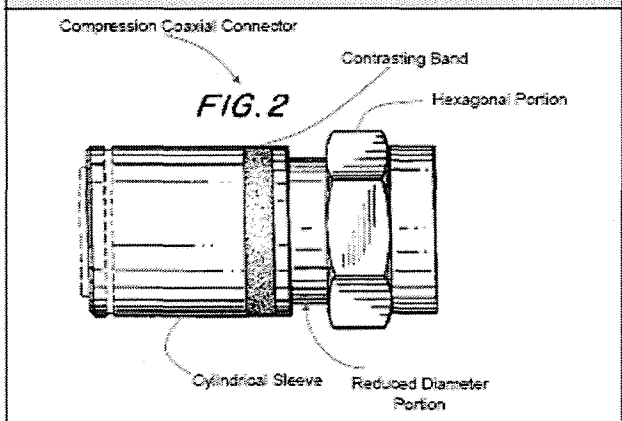	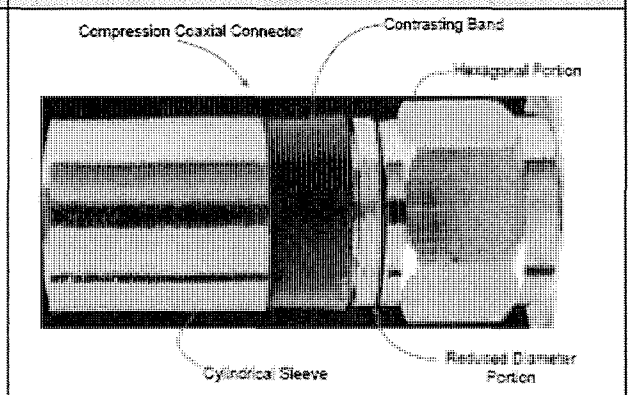

(CBr at 87.) Dr. Eldering's "verbal characterization"[26] of the design claimed in the '539 patent is undisputed:

> The compression connector depicted in the closed position appears as a smooth cylinder of the same diameter from end to end, with the following exceptions: [a] hexagonal portion toward one end; and [a] portion of reduced diameter next to the hexagonal portion and near the center. The portion of reduced diameter has a sharp change in diameter as opposed to a gradual change. The color is constant throughout except for a single contrasting band of about the same width as the reduced diameter portion. The contrasting band is generally centered and has the appearance of being substantially the same diameter as the overall cylinder. The end opposite the hexagonal portion is a relatively long cylindrical sleeve.

(CDX-36; SBr. at 22.) He then identifies the features from his characterization in the accused Fei Yu product:

> The Fei Yu Model 043 connector is a compression connector which, in the closed position, appears as a smooth cylinder of the same diameter from end to end, with the following exceptions: [t]he Fei Yu Model 043 connector has a hexagonal portion toward one end; and [t]he Fei Yu Model 043 connector has a portion of reduced diameter next to the hexagonal portion and near the center. The portion of reduced diameter in the Fei Yu Model 043 connector has a sharp change in diameter as opposed to a gradual change. The Fei Yu Model 043 connector has a

[26] *Egyptian Goddess, Inc. v. Swisa, Inc.*, 543 F.3d 665, 680 (Fed. Cir. 2008).

> constant color throughout except for a single contrasting band of about the same width as the reduced diameter portion. The contrasting band of the Fei Yu Model 043 connector is generally centered and has the appearance of being substantially the same diameter as the overall cylinder. The end of the Fei Yu Model 043 connector opposite the hexagonal portion is a relatively long cylindrical sleeve.

(CDX-36.) Dr. Eldering concludes, and Staff agrees, that the Fei Yu Model 043 infringes the claim of the '539 design patent. (Tr. at 685:11-13; SBr. at 29.)

Based on the foregoing, the Administrative Law Judge finds that PPC has presented undisputed, substantial, reliable, and probative proof to show by a preponderance of the evidence that the Fei Yu Model 043 infringes the '539 patent.

E. Analysis of the Accused Fei Yu 039B Connector with Respect to the '076 Patent.

The Administrative Law Judge has already found that the Fei Yu Model 039B infringes the sole claim of the '076 patent. (Order No. 22 at 9-10.)

V. VALIDITY

A. Background

One cannot be held liable for practicing an invalid patent claim. *See Pandrol USA, LP v. AirBoss Railway Prods., Inc.*, 320 F.3d 1354, 1365 (Fed. Cir. 2003). However, patent claims are presumed valid. 35 U.S.C. § 282. A respondent that has raised patent invalidity as an affirmative defense must overcome the presumption by "clear and convincing" evidence of invalidity. *Checkpoint Systems, Inc. v. United States Int'l Trade Comm'n*, 54 F.3d 756, 761 (Fed. Cir. 1995). Further, as stated by the Federal Circuit in *Ultra-Tex Surfaces, Inc. v. Hill Bros. Chem. Co.*:

> when a party alleges that a claim is invalid based on *the very same references* that were before the examiner when the claim was allowed, that party assumes the following additional burden:

> When no prior art other than that which was considered by the PTO examiner is relied on by the attacker, he has the added burden of overcoming the deference that is due to a qualified government agency presumed to have properly done its job, which includes one or more examiners who are assumed to have some expertise in interpreting the references and to be familiar from their work with the level of skill in the art and whose duty it is to issue only valid patents.

Ultra-Tex Surfaces, Inc. v. Hill Bros. Chem. Co., 204 F.3d 1360, 1367 (Fed. Cir. 2000) (emphasis added) (quoting *American Hoist & Derrick Co. v. Sowa & Sons, Inc.*, 725 F.2d 1350, 1359 (Fed. Cir. 1984) "*American Hoist*"). This burden of showing invalidity by clear and convincing evidence is especially difficult when, as is the present case, Respondents attempt to rely on prior art that was before the patent examiner during prosecution. *PowerOasis, Inc. v. T-Mobile USA, Inc.*, 522 F.3d 1299, 1304 (Fed. Cir. 2008); *American Hoist & Derrick Co. v. Sowa & Sons, Inc.*, 725 F.2d 1350, 1359-60 (Fed. Cir. 1984).

B. Anticipation.

A determination that a patent is invalid as being anticipated under 35 U.S.C. § 102 requires a finding, based upon clear and convincing evidence, that each and every limitation is found either expressly or inherently in a single prior art reference. *See Celeritas Techs. Inc. v. Rockwell Int'l Corp.*, 150 F.3d 1354, 1361 (Fed. Cir. 1998). Anticipation is a question of fact, including whether a limitation, or element, is inherent in the prior art. *In re Gleave*, 560 F.3d 1331, 1334-35 (Fed. Cir. 2009). The limitations must be arranged or combined the same way as in the claimed invention, although an identity of terminology is not required. *Id.* at 1334 ("the reference need not satisfy an *ipsissimis verbis* test"); MPEP § 2131.

In addition, the prior art reference's disclosure must enable one of ordinary skill in the art to practice the claimed invention "without undue experimentation."[27] *Gleave,* 560 F.3d at 1334-35. A prior art reference that allegedly anticipates the claims of a patent is presumed enabled; however, a patentee may present evidence of nonenablement to overcome this presumption. *Impax Labs., Inc. v. Aventis Pharmaceuticals Inc.*, 468 F.3d 1366, 1382 (Fed. Cir. 2006). "[W]hether a prior art reference is enabling is a question of law based upon underlying factual findings." *Gleave,* 560 F.3d at 1335.

The Nikitas Reference.

Respondents argue that claims 1 and 5 of the '257 patent are invalid as anticipated by the "Nikitas"[28] prior art reference if their claim construction positions are not adopted by the Administrative Law Judge. (RBr. at 57-59.)

PPC argues that Respondents presented no evidence relating to the alleged invalidity of the '257 patent, and that Respondents have a heightened burden to show that a prior art reference already before the patent examiner anticipates the asserted patent claims. (CBr. at 69; CRBr. at 60.) PPC further argues that if its claim construction positions are adopted, this would not negatively impact the validity of claims 1 and 5 of the '257 patent. (CRBr. at 60-61.)

Staff argues that Respondents failed to proffer any testimony at trial to support its invalidity defenses. (SBr. at 34-35; SRBr. at 6-7.) In addition, Staff argues that Respondents failed to articulate a proper anticipation defense in their pre-hearing briefing and thus this defense has been abandoned. (SBr. at 34-35.)

---

[27] This is not to be confused with the standards for enablement to support issuance of a patent claim under 35 U.S.C. § 112. *Gleave,* 560 F.3d at 1334.

[28] Respondents fail to explain in their initial post-hearing brief that "Nikitas" refers to U.S. Patent No. 4,408,822. (*See* JX-2 at JOINT-TRIAL-EXHIBIT-000101-105.)

The Administrative Law Judge finds that, even if all of PPC's proffered claim constructions were adopted, Respondents fail to undertake an analysis or present evidence to show by clear and convincing evidence that each and every element of any of claims 1 and 5 of the '257 patent are disclosed in a single piece of prior art. (RBr. at 57-59; RRBR. at 38-39.) Further, as stated by the Federal Circuit in *Ultra-Tex*:

> when a party alleges that a claim is invalid based on the *very same references* that were before the examiner when the claim was allowed, that party assumes the following additional burden:
>
> > When no prior art other than that which was considered by the PTO examiner is relied on by the attacker, he has the added burden of overcoming the deference that is due to a qualified government agency presumed to have properly done its job, which includes one or more examiners who are assumed to have some expertise in interpreting the references and to be familiar from their work with the level of skill in the art and whose duty it is to issue only valid patents.

Ultra-Tex, 204 F.3d at1367 (emphasis added) (quoting *American Hoist*, 725 F.2d at 1359). Examiner DeMello is accorded the legal presumption that she possesses expertise in interpreting U.S. Patent No. 4,408,822 (Nikitas) in relation to the '257 patent, not to mention familiarity with the level of ordinary skill in the art. *American Hoist*, 725 F.2d at 1359.

C. Obviousness.

Under 35 U.S.C. § 103(a), a patent is valid unless "the differences between the subject matter sought to be patented and the prior art are such that the subject matter as a whole would have been obvious at the time the invention was made" to a person having ordinary skill in the art. 35 U.S.C. § 103(a). The ultimate question of obviousness is a question of law, but "it is well understood that there are factual issues underlying the ultimate obviousness decision." *Richardson-Vicks Inc. v. Upjohn Co.*, 122 F.3d 1476, 1479 (Fed. Cir. 1997) (citing *Graham v. John Deere Co. of Kansas City*, 383 U.S. 1, 17 (1966) ("*Graham*")).

After claim construction, "[t]he second step in an obviousness inquiry is to determine whether the claimed invention would have been obvious as a legal matter, based on underlying factual inquiries including: (1) the scope and content of the prior art, (2) the level of ordinary skill in the art, (3) the differences between the claimed invention and the prior art; and (4) secondary considerations of non-obviousness." *Smiths Indus. Med. Sys., Inc. v. Vital Signs, Inc.*, 183 F.3d 1347, 1354 (Fed. Cir. 1999) (citing *Graham*, 383 U.S. at 17). The existence of secondary considerations of non-obviousness does not control the obviousness determination: a court must consider "the totality of the evidence" before reaching a decision on obviousness. *Richardson-Vicks*, 122 F.3d at 1483.

The Supreme Court recently clarified the obviousness inquiry in *KSR Int'l Co. v. Teleflex Inc.*, 550 U.S. 389 (2007) ("*KSR*"). The Supreme Court said:

> When a work is available in one field of endeavor, design incentives and other market forces can prompt variations of it, either in the same field or a different one. If a person of ordinary skill can implement a predictable variation, § 103 likely bars its patentability. For the same reason, if a technique has been used to improve one device, and a person of ordinary skill in the art would recognize that it would improve similar devices in the same way, using the technique is obvious unless its actual application is beyond his or her skill. *Sakraida* and *Anderson's-Black Rock* are illustrative–a court must ask whether the improvement is more than the predictable use of prior art elements according to their established functions.
>
> Following these principles may be more difficult in other cases than it is here because the claimed subject matter may involve more than the simple substitution of one known element for another or the mere application of a known technique to a piece of prior art ready for the improvement. Often, it will be necessary for a court to look to interrelated teachings of multiple patents; the effects of demands known to the design community or present in the marketplace; and the background knowledge possessed by a person having ordinary skill in the art, all in order to determine whether there was an apparent reason to combine the known elements in the fashion claimed by the patent at issue. To facilitate review, this analysis should be made explicit.
>
> * * *
>
> The obviousness analysis cannot be confined by a formalistic conception of the words teaching, suggestion, and motivation, or by overemphasis on the

> importance of published articles and the explicit content of issued patents. The diversity of inventive pursuits and of modern technology counsels against limiting the analysis in this way. In many fields it may be that there is little discussion of obvious techniques or combinations, and it often may be the case that market demand, rather than scientific literature, will drive design trends. Granting patent protection to advances that would occur in the ordinary course without real innovation retards progress and may, in the case of patents combining previously known elements, deprive prior inventions of their value or utility.

KSR, 550 U.S. at 417-19.

The Federal Circuit has since held that when a patent challenger contends that a patent is invalid for obviousness based on a combination of several prior art references, "the burden falls on the patent challenger to show by clear and convincing evidence that a person of ordinary skill in the art would have had reason to attempt to make the composition or device, or carry out the claimed process, and would have had a reasonable expectation of success in doing so." *PharmaStem Therapeutics, Inc. v. ViaCell, Inc.*, 491 F.3d 1342, 1360 (Fed. Cir. 2007) (citations omitted).

> The TSM[29] test, flexibly applied, merely assures that the obviousness test proceeds on the basis of evidence--teachings, suggestions (a tellingly broad term), or motivations (an equally broad term)--that arise before the time of invention as the statute requires. As *KSR* requires, those teachings, suggestions, or motivations need not always be written references but may be found within the knowledge and creativity of ordinarily skilled artisans.

Ortho-McNeil Pharmaceutical, Inc. v. Mylan Laboratories, Inc., 520 F.3d 1358, 1365 (Fed. Cir. 2008).

[29] TSM means teaching, suggestion, motivation.

The Nikitas, Baker, and Samchisen References.

Relying entirely on the prosecution history, Respondents argue that claims 1 and 5 of the '257 patent are invalid as obvious by the "Nikitas,"[30] "Baker"[31] and "Samchisen"[32] prior art references if Respondents' claim construction positions are not adopted by the Administrative Law Judge. (RBr. at 60-63.)

PPC argues that "[a]s no evidence was presented at the hearing that rebuts the statutory presumption of validity of the asserted claims of the '257 patent or that demonstrates that the PTO was wrong in its decision to grant the '257 patent . . .[,] Fu Ching/Gem has not overcome the statutory presumption that the '257 patent is valid." (CBr. at 69.) PPC further argues that Respondents set forth their position "without consulting with or citing to a person of ordinary skill." (CRBr. at 62.)

Staff argues that Respondents do not present clear and convincing evidence to support their obviousness arguments. (SBr. at 35.) According to Staff, "Fu Ching merely picks and chooses various components from multiple prior art sources and then argues, without any expert testimony to support the many conclusions, that the asserted claims of the '257 patent are invalid." (SRBr. at 7.)

The Administrative Law Judge finds that, even if all of PPC's proffered claim constructions were adopted, Respondents fail to undertake an analysis or present evidence to show by clear and convincing evidence that each and every element of any of claims 1 and 5 of the '257 patent are disclosed by U.S. Patent Nos. 4,408,822 (Nikitas), 4,614,390 (Baker), and 4,834,675 (Samchisen). (RBr. at 59-63; RRBR. at 39-40.) Notably, Respondents fail to address

[30] As discussed above, Respondents omitted an explanation in their post-hearing briefing that "Nikitas" refers to U.S. Patent No. 4,408,822. (*See* JX-2 at JOINT-TRIAL-EXHIBIT-000101-105.)

[31] Respondents further omitted to explain that "Baker" refers to U.S. Patent No. 4,614,390. (*See* JX-2 at JOINT-TRIAL-EXHIBIT-000087-92.)

[32] Respondents further omitted to explain that "Samchisen" refers to U.S. Patent No. 4,834,675. (*See* JX-2 at JOINT-TRIAL-EXHIBIT-000078-86.)

the scope and content of the prior art, ignore the level of ordinary skill in the art (as discussed above in Section III.B. Respondents never discussed or defined the level of ordinary skill in the art), make conclusory allegations as to the differences between the claimed invention and the prior art through selective citations to the prosecution history, and overlook any secondary indicia of non-obviousness. For example, Respondents present no evidence to overcome statements made during the '257 patent prosecution that the Baker reference is in an unrelated field and that a combination of Baker and Nikitas was not obvious to try:

> Applicant's attorney wishes to express his appreciation to the Examiners for the courtesies extended during the interview conducted on April 12, 1995.
>
> At that interview, applicant's attorney questioned the propriety of combining the Baker reference with the Nikitas reference. While Nikitas is in the field of coaxial cable end connectors, Baker is decidedly not. Rather, Baker is directed to a wire lead sealing device of the type employed by the automotive industry.
>
> Nikitas is plagued by the difficulties associated with detachable nut members, which frequently are dropped and sometimes lost during assembly procedures, particularly when installations are being performed outdoors under adverse climatic conditions. Such problems have been longstanding, as evidenced by the Kirby and Hayward references.
>
> If it were obvious to combine Baker with Nikitas in order to solve this problem, then one would expect that the man skilled in the art would have done so shortly after the advent of Baker. However, the man skilled in the art failed to do so, and instead opted for arrangements of the type shown in [Samchisen], where the compression sleeve 60 is only temporarily connected to the connector body 12, and must be separated from the connector body during assembly, thus presenting the same problems plaguing earlier prior art arrangements.
>
> The present invention solves this problem by inseparably coupling tubular locking member 26 to the outer collar 30 of the connector body. Moreover, the engagement means used to achieve this inseparable coupling effects circular engagement of the two components in a manner plainly superior to that disclosed in the Baker reference.
>
> At the conclusion of the aforesaid interview, it was agreed that the amended claims 1 and 13 set forth above defined over the art of record.

(JX-2 at JOINT-TRIAL-EXHIBIT-000139-40 (emphasis added and removed, footnote reference omitted).)

Further, as discussed above with respect to anticipation, Respondents have a heightened burden to explain how the same references that were before Examiner DeMello should render the asserted claims invalid under PPC's proposed claim constructions. Examiner DeMello is accorded the legal presumption that she possesses expertise in interpreting U.S. Patent Nos. 4,408,822 (Nikitas), 4,614,390 (Baker), and 4,834,675 (Samchisen) in relation to the '257 patent, not to mention familiarity with the level of ordinary skill in the art. *American Hoist*, 725 F.2d at 1359. In contrast, Respondents have not produced the opinions of a person of skill in the art, or indeed any evidence, to support such conclusory allegations as "[o]nce the advantage of two securing positions is realized through Baker, it is obvious to utilize the snap structure of Samchisen to effectuate it." (RBr. at 62.)

The Administrative Law Judge further rejects Respondents' argument that *KSR* mandates a different result. (RRBr. at 40.) As the Supreme Court in *KSR* points out:

> As is clear from cases such as Adams, a patent composed of several elements is not proved obvious merely by demonstrating that each of its elements was, independently, known in the prior art. Although common sense directs one to look with care at a patent application that claims as innovation the combination of two known devices according to their established functions, it can be important to identify a reason that would have prompted a person of ordinary skill in the relevant field to combine the elements in the way the claimed new invention does. This is so because inventions in most, if not all, instances rely upon building blocks long since uncovered, and claimed discoveries almost of necessity will be combinations of what, in some sense, is already known.

KSR, 550 U.S. at 418-19. Respondents fail to identify a reason that would have prompted a person of ordinary skill in the art to look outside the relevant field (the design and manufacture of coaxial cable connectors, *see* Section III.B. above) at "a wire lead sealing device of the type employed by the automotive industry" disclosed by Baker, or why this allegedly obvious

combination did not occur to a person of ordinary skill in the eight years between issuance of U.S. Patent No. 4,614,390 (Baker) in 1986 and the filing of the '257 patent application in 1994.

Accordingly, the Administrative Law Judge finds that the asserted claims 1 and 5 of the '257 patent are not invalid under 35 U.S.C. § 103 for obviousness.

VI. ENFORCEABILITY/PATENT MISUSE

Patent misuse is an equitable patent infringement defense designed to "to restrain practices that did not in themselves violate any law, but that drew anticompetitive strength from the patent right, and thus were deemed to be contrary to public policy." *Princo Corp. v. Int'l Trade Comm'n,* 563 F.3d 1301, 1307 (Fed. Cir. 2009) (quoting *U.S. Philips Corp. v. Int'l Trade Comm'n*, 424 F.3d 1179, 1184 (Fed. Cir. 2005)). According to the Federal Circuit, "[t]he key inquiry in determining whether a patentee's conduct constitutes misuse 'is whether, by imposing conditions that derive their force from the patent, the patentee has impermissibly broadened the scope of the patent grant with anticompetitive effect.'" *Id. See also Zenith Radio Corp. v. Hazeltine Research, Inc.*, 395 U.S. 100, 136-140 (1969) (may be misuse of patent to extend patent monopoly by requiring licensee to pay royalties on unpatented products or after expiration of patent).

Citing to *Zenith Radio*, Respondents argue that PPC "is guilty of misuse because it has systematically threatened enforcement and engaged in enforcement of the '257 Patent against compression connectors that do not fall within the lawful scope of the '257 Patent." (RBr. at 69.) According to Respondents, PPC had no legitimate right to assert the '257 patent against Respondents, "falsely and deceptively caused the Commission to issue a Notice of Investigation against the Respondents" by incorrectly identifying the "engagement means" of the claimed invention, subpoenaed one of Gem's largest customers allegedly causing a drop in sales, notified

one of Gem's potential customers of the current Investigation allegedly causing a loss of business, and unreasonably accused Respondents' RCA and BNC connectors. (RBr. at 69-71.)

PPC denies that it has made sham infringement allegations against Respondents, pointing out that its allegations in this Investigation are backed by an infringement analysis by outside counsel, its experts, and, "with very few exceptions," by Staff. (CBr. at 77-78.) PPC further notes that Respondents' summary determination motion was denied, and that it is "difficult to conceive of a 'baseless' claim that survived summary judgment." (*Id.* at 78 (quoting *Sulzer Textil A.G. v. Piconal N.V.*, 358 F.3d 1356, 1370 (Fed. Cir. 2004)).) PPC further argues that Respondents failed to plead their "belated and mistaken allegations of fraudulent inducement" with particularity or brief these issues in their pre-hearing brief. (CRBr. at 71.) In response to Respondents' claim of lost sales, PPC says that Mr. O'Neill "admitted that the drop in sales is a likely result of the economic recession." (CORFF 408.)

Staff argues that "Respondents' arguments (prehearing br. at 56) appear to be nothing more than modified claim construction arguments and a novel theory that a successful non-infringement argument means that the Complainant engaged in *per se* patent misuse." (SBr. at 36.) Staff further argues that Respondents "misunderstand the court's decision" in *Zenith Radio*. (*Id.* at 37.) Staff also argues that "not one allegation is supported by credible evidence." (SRBr. at 7.)

The Administrative Law Judge finds that Respondents have failed to demonstrate any bad faith or other misconduct on the part of PPC in enforcing the '257 patent. "The law recognizes a presumption that the assertion of a duly granted patent is made in good faith; this presumption is overcome only by affirmative evidence of bad faith." *C.R. Bard, Inc. v. M3 Systems, Inc.*, 157 F.3d 1340, 1369 (Fed. Cir. 1998) (internal citation omitted). Even if this were not the case, it is

not clear that Respondents have articulated a patent misuse defense. Patent misuse does not include "a general notion of 'wrongful' use," but instead is limited to a handful of specific practices such as tying, enforced package licensing, price restraints, and extended royalty terms. *Id.* at 1372-73. According to the Federal Circuit, "[i]t is not patent misuse to bring suit to enforce patent rights not fraudulently obtained[.]" *Id.* (rejecting jury instruction and jury finding on charge that patentee was attempting to enforce the patents against goods known not to be infringing). As PPC points out (*see* CBr. at 76-77), Respondents appear to be claiming a "sham litigation" defense. However, such a lawsuit must be objectively meritless and requires a finding that patentee attempted to interfere directly with a competitor's business relationships. *C.R. Bard*, 157 F.3d at 1368. Respondents have made no such showing here, particularly in light of Staff's conclusion that Respondents' accused F-connectors infringe claims 1 and 5 the '257 patent. (SBr. at 25; SCL 95-114.)

VII. EQUITABLE ESTOPPEL

In order to sustain the affirmative defense of equitable estoppel, Respondents must establish three elements: (i) misleading conduct by PPC leading Respondents to believe that PPC would not enforce its patent; (ii) Respondents' reliance on that conduct; and (iii) material prejudice to Respondents based on that reliance. *Aukerman Co. v. R.L. Chaides Constr. Co.*, 960 F.2d 1020, 1041-43 (Fed. Cir. 1992) (en banc). Respondents must prove all three elements by a preponderance of the evidence. *Id.* at 1046. Even where the three elements of equitable estoppel are established, the Administrative Law Judge must also "take into consideration any other evidence and facts respecting the equities of the parties in exercising [his] discretion and deciding whether to allow the defense of equitable estoppel to bar the suit." *Aukerman*, 960 F.2d

at 1043. Equitable estoppel, if established, may bar all relief on a claim. *Aukerman*, 960 F.2d at 1041.

Respondents argue that "PPC purposefully engaged in misleading conduct that caused Gem and Fu Ching to believe that PPC agreed that there was no infringement of the '257 patent." (RBr. at 64 (emphasis in original).) Without a single cite to evidence in the record, Respondents argue that PPC sent Fu Ching a cease and desist letter in 2004 to which Fu Ching responded that it does not infringe. (*Id.*) According to Respondents, "[g]iven this letter exchange, the evidence was undisputed that Fu Ching (reasonably) believed that the issue of infringement had been resolved. Specifically, by its inaction and silence, PPC led Fu Ching to believe that PPC agreed that because the locking member could be 'manually detached from the connector body easily,' Fu Ching's connector did not infringe any claim of the '257 patent." (*Id.* at 64-65.)

PPC argues that the case law does not support Respondents' arguments because silence, absent some other factor, does not constitute sufficient misleading conduct. (CRBr. at 63.) PPC also argues that it would not have been reasonable for Respondents to have been misled in light of the parties' failure to enter into licensing negotiations or discuss liability releases, and the series of patent infringement actions asserted by PPC from 2001 to 2008. (CBr. at 71-72.) PPC further argues that the facts do not show that either of Respondents took any affirmative action in reliance of PPC's allegedly misleading conduct, citing Ms. Hsia's hearing testimony at Tr. 1360:20-1361:5 and Mr. O'Neil's testimony at Tr. 1576:23-1578:4. (*Id.* at 72-73.) With respect to Gem, PPC says that "Gem was relying not on the silence of PPC, but rather on the opinion of its patent attorney that the Respondents' connectors did not infringe." (*Id.* at 74.)

Staff argues that Respondents can only point to "mere silence" to show misleading conduct by PPC, which the Federal Circuit held in *Scholle Corp. v. Blackhawk Molding Co.,* 133

F.3d 1469, 1471 (Fed. Cir. 1998) is insufficient to establish an equitable estoppel defense. (SBr. at 36; SRBr. at 7.) Staff further argues that the evidence fails to demonstrate reliance or prejudice. (SBr. at 36.)

As an initial matter, the Administrative Law Judge finds, as a result of Respondents' failure to support their assertions with even a single citation to an admitted piece of evidence, or even the hearing transcript, with respect to this affirmative defense in their post-hearing briefing (*see* RBr. at 63-69; RRBr. at 45-46), that Respondents have not established any of the elements of equitable estoppel. Furthermore, a detailed examination of the record indicates that equitable estoppel is not warranted here.

PPC sent nonparty R.P. Electronics a cease and desist letter in April of 2004 and received a response from Fu Ching's representative saying that the connectors alleged to infringe the '257 patent are protected by Fu Ching's patent. (JX-7.) Fu Ching's letter further threatened to sue PPC. (*Id.*) PPC responded that "PPC has and will continue to pursue unscrupulous copyists and infringers of its patent rights" and that Fu Ching was mistaken in its belief that its own patent would serve to protect Fu Ching from infringement of the '257 patent. (CX-153.) PPC further stated: "[w]e would welcome your client's submission to jurisdiction of the U.S. courts to pursue our infringement claims directly against the manufacturer and importers of these infringing connectors." (*Id.*)

PPC sent Gem a cease and desist letter in August of 2004 to warn Gem of the belief that one of Gem's F-series connectors infringed the '257 patent. (JX-5C at 1.) Counsel for both parties corresponded for several months, with PPC asserting infringement and Gem asserting noninfringement. (RX-76C-78C; RX-80C; RX-83C; RX-86C-87C.) In response to PPC's requests, Gem sent samples of some of its unassembled connectors in March of 2005 (RX-87C),

and this ended the correspondence. PPC also sent Fu Ching a second cease and desist letter in December 2004 to warn Fu Ching with respect to its sales of connectors to Gem. (RX-36C.) Fu Ching promptly responded that its products do not infringe (RX-38C), and this ended the correspondence.

The record, however, is devoid of any sign that PPC engaged in misleading inaction in the period between the parties' last contacts and the filing of this Investigation that would give rise to a reasonable belief that PPC's claims against Respondents were abandoned. *Auckerman,* 960 F.2d at 1042. The Commission has previously found that a thirty-month period of silence after two clear warnings of a patentee's intent to enforce its patent rights was not misleading. *See Certain Sortation Systems, Parts Thereof, and Products Containing Same*, Inv. No. 337-TA-460, Comm'n Op. at 15-16 (U.S.I.T.C., February 19, 2003) (*aff'd Vanderlande Industries Nederland BV v. I.T.C.*, 366 F.3d 1311 (Fed. Cir. 2004) ("*Sortation Systems*")). The period of concern here is not much greater.

Furthermore, the record does not show that Respondents substantially relied on PPC's allegedly misleading conduct. On the contrary, Gem immediately sought indemnity from Fu Ching via its sales agent. (CX-174C-75C; Tr. at 1566:13-1569:1.) According to Mr. O'Neill, Gem's Vice President of operations, "I would be pretty crazy not to ask for a letter of indemnity if I could get one." (Tr. at 1568:25-1569:1 (O'Neill).) In addition, Ms. Hsia testified that Fu Ching's sales agent had suggested that Fu Ching perform a design-around:

{

}

(Tr. at 1388:11-1389:14 (emphasis added).) The above evidence suggests that Gem and Fu Ching were quite concerned about being sued by PPC, and were not lulled into a sense of security. *Gasser Chair Company, Inc. v. Infanti Chair Manufacturing Corp.*, 60 F.3d 770, 776 (Fed. Cir. 1995). The evidence also shows that Fu Ching and Gem proceeded with their business operations under the belief that their products were non-infringing (*see e.g.,* Tr. at 1576:23-1579:11), and not because Respondents believed PPC had no plans to sue them. *Sortation Systems*, at 16.

Accordingly, the Administrative Law Judge finds that Respondents have not established equitable estoppel by a preponderance of the evidence.

VIII. WAIVER OR WITHDRAWAL OF RESPONDENTS' OTHER DEFENSES.

Respondents' responses to the Complaint contain a number of defenses and arguments that were not raised in Respondents' pre-hearing briefing, discussed at the hearing, or raised in post-hearing briefing ("non-asserted defenses"). In addition, Respondents have expressly stated which affirmative defenses remain in the Investigation. According to Respondents' counsel at the hearing, "[w]ith respect to affirmative defenses, there are four that are being asserted." (Tr. at 129:7-9 (Horvack).) He explained that these are anticipation, obviousness, equitable estoppel,

and patent misuse. (*Id.* at 129:7-9, 130:3, 131:6-7, 131:23 (Horvack).) The non-asserted defenses include collateral estoppel, lack of unfair act, failure to state a claim, laches,[33] unclean hands, relief not in the public interest, prosecution history laches, prosecution history estoppel, and lack of jurisdiction. (*See* Response of Fu Ching Technical Industrial Co. Ltd. to the Complaint of John Mezzalingua Associates, Inc. d/b/a/ PPC, Inc. and Notice of Investigation and Fu Ching Technical Industrial Co. Ltd.'s Affirmative Defenses, dated August 7, 2008[34] ("Fu Ching Second Response"), at 15-17; Response of Gem Electronics to the Complaint of John Mezzalingua Associates, Inc. d/b/a/ PPC, Inc. and Notice of Investigation and Gem Electronics' Affirmative Defenses, dated July 3, 2008 ("Gem Response"), at 14-16.) Under Ground Rules 8 and 11.1, these non-asserted defenses and arguments are deemed abandoned or withdrawn.

IX. DOMESTIC INDUSTRY

As stated in the Notice of Investigation, a determination must be made as to whether an industry in the United States exists as required by subsection (a)(2) of Section 337. Section 337 declares unlawful the importation, the sale for importation or the sale in the United States after importation of articles that infringe a valid and enforceable U.S. patent "only if an industry in the United States, relating to articles protected by the patent . . . concerned, exists or is in the process of being established." 19 U.S.C. § 1337(a)(2); *Certain Ammonium Octamolybdate Isomers*, Inv. No. 337-TA-477, Comm'n Op. at 55 (U.S.I.T.C., Jan. 2004) ("*Certain Isomers*"). The domestic industry requirement consists of both an economic prong (*i.e.*, the activities of, or investment in, a domestic industry) and a technical prong (*i.e.*, whether complainant practices its own patents).

[33] It should be noted that the Administrative Law Judge previously found that laches does not provide a respondent accused of patent infringement with any meaningful defense in a Section 337 Investigation. (Order 19 at 7.)
[34] The record is unclear as to why, or under what authority, a second response was filed by Respondent Fu Ching Technical Industrial Co. Ltd. The record further does not appear to reflect any objection made by Staff or PPC as to this second response.

Certain Isomers, at 55. The complainant bears the burden of proving the existence of a domestic industry. *Certain Methods of Making Carbonated Candy Products,* Inv. No. 337-TA-292, Comm'n Op. at 34-35, Pub. No. 2390 (U.S.I.T.C., June 1991).

Thus, in this Investigation PPC must show that it satisfies both the technical and economic prongs of the domestic industry requirement with respect to the '194, '257, '539 and '076 patents. The Administrative Law Judge has already found that PPC has satisfied the economic domestic industry requirement with respect to the '194, '257 and '076 patents and the technical domestic industry with respect to the '076 patent. (Order No. 18 at 6; Order No. 22 at 15-16.) In addition, as explained below, it is found that the economic domestic industry has been satisfied with respect to the '539 patent and the technical domestic industry requirement has been satisfied with respect to the '194, '257, and '539 patents.

A. Technical Analysis

A complainant in a patent-based Section 337 investigation must demonstrate that it is practicing or exploiting the patents at issue. *See* 19 U.S.C. § 1337(a)(2) and (3); *Certain Microsphere Adhesives, Process for Making Same, and Products Containing Same, Including Self-Stick Repositionable Notes*, Inv. No. 337-TA-366, Comm'n Op. at 8, Pub. No. 2949 (U.S.I.T.C., January 16, 1996). "In order to satisfy the technical prong of the domestic industry requirement, it is sufficient to show that the domestic industry practices any claim of that patent, not necessarily an asserted claim of that patent." *Certain Isomers*, *supra*, at 55. Fulfillment of the "technical prong" of the domestic industry requirement is not determined by a rigid formula but rather by the articles of commerce and the realities of the marketplace. *Certain Diltiazem Hydrochloride and Diltiazem Preparations*, Inv. No. 337-TA-349, Initial Determination at 139, Pub. No. 2902 (U.S.I.T.C., June 1995) (unreviewed in relevant part); *Certain Double-Sided*

Floppy Disk Drives and Components Thereof, Inv. No. 337-TA-215, Views of the Comm'n, Additional Views of Chairwoman Stern on Domestic Industry and Injury at 22, 25, Pub. No. 1860 (U.S.I.T.C., May 1986).

The test for claim coverage for the purposes of the technical prong of the domestic industry requirement is the same as that for infringement. *Certain Doxorubicin and Preparations Containing Same*, Inv. No. 337-TA-300, Initial Determination at 109, 1990 WL 710463 (U.S.I.T.C., May 21, 1990), *aff'd*, Views of the Commission at 22 (October 31, 1990). "First, the claims of the patent are construed. Second, the complainant's article or process is examined to determine whether it falls within the scope of the claims." *Id.* The technical prong of the domestic industry can be satisfied either literally or under the doctrine of equivalents. *Certain Dynamic Sequential Gradient Compression Devices and Component Parts Thereof*, Inv. No. 337-TA-335, Initial Determination at 44, Pub. No. 2575 (U.S.I.T.C., November 1992).

1. '194 Patent.

It is undisputed that the PPC EX Series connectors, including the EX660, (the "EX Connectors") practice all of the elements of claim 1 of the '194 patent. (CBr. at 27; SBr. at 30; SFF 345-360 (undisputed); CFF III.D.1-17 (undisputed); CFF III.D.19-20 (undisputed); CX-227; CX-292; CDX-34; CPX-32; CPX 46; CDX-34.[35]) PPC also argues, and Staff does not dispute, that the EX Connectors practice all the elements of claim 2 of the '194 patent. (CBr. at 27; CFF III.D.1-16 (undisputed); CFF III.D.18-20 (undisputed).) Dr. Eldering testified that the EX Connectors meet all of the elements of claims 1 and 2 of the '194 patent. (CBr. at 27; Tr. at 801:21-806:19 (Eldering).) In addition, PPC submitted claim charts, sectioned EX Connector

[35] Respondents' post-hearing briefs only relate to the '257 patent and do not address the '194 patent.

samples, and photographs created by Dr. Eldering to show the correlation between the elements of claims 1 and 2 and the EX Connectors. (CBr. at 27; CX-227; CDX-34; CPX-32; CPX-46.)

The Administrative Law Judge finds that PPC has provided substantial, reliable and probative proof to establish by a preponderance of the evidence, that the EX Connector is a coaxial cable connector with "a tubular post having a first end adapted to be inserted into an exposed end of [a] coaxial cable around the dielectric thereof and under the conductive grounding sheath thereof, said tubular post having an opposing second end," "a nut having a first end for rotatably engaging the second end of said tubular post and having an opposing second end with an internally threaded bore for threadedly engaging the threaded port, "a cylindrical body member having a first end and a second end, the first end of said cylindrical body member including a cylindrical sleeve having an outer wall of a first diameter and an inner wall, the inner wall bounding a first central bore extending about said tubular post, the second end of said cylindrical body member engaging said tubular post proximate the second end thereof, said cylindrical sleeve having an open rear end portion for receiving the outer jacket of the coaxial cable, said open rear end portion being deformable," "a compression ring having first and second opposing ends and having a central passageway extending therethrough between the first and second ends thereof, the first end of said compression ring having a first" non-tapered, constant diameter internal bore "of a diameter commensurate with the first diameter of the outer wall of said cylindrical sleeve for allowing the first end of said compression ring to extend over the first end of said cylindrical body member, the central passageway of said compression ring including an inwardly tapered annular wall leading from the first internal bore and narrowing to a reduced diameter as compared with the first diameter," and "said inwardly tapered annular wall causing said rear end portion of said cylindrical sleeve to be deformed inwardly toward said tubular post

and against the jacket of the coaxial cable as said compression ring is advanced axially over the cylindrical body member toward the second end of said cylindrical body member." Thus, the PPC EX Connectors meet the limitations of claims 1 and 2 of the '194 patent, satisfying the technical prong of the domestic industry requirement.

2. '257 Patent.

PPC argues that its CMP connector (the "CMP") practices all of the elements of claims 1 and 5 of the '257 patent. (CBr. at 67-68.)

Respondents argue that whether the CMP practices the '257 patent depends on the claim construction of claim language "inseparably couple" in claim 1. (RBr. at 56-57.) In addition Respondents argue that PPC failed to present sufficient evidence to support a showing that the CMP locking member is "not detachable from the connector body during normal and ordinary shipping[,]" although they admit that "during normal shipping, handling and installation, the PPC CMP locking member is inseparably coupled to the connector body." (*Id.*; RRBr. at 37; CFF IV.D.14 (undisputed).)

Staff argues that the CMP practices at least claim 1 of the '257 patent. (SBr. at 30.)

Whether the PPC CMP connectors meet the preamble or elements 'a'-'c' of claim 1 of the '257 patent is not in issue. (CBr. at 67-68; RBr. at 56-57; SBr. at 30; CFF IV.D.3-9 (undisputed); Tr. at 826:23-847:25 (Eldering); CDX-30; CX-226; CPX-31; CPX-45.) At issue is whether the CMP meets element 'd' of claim 1 of the '257 patent.

With respect to claim 1, Dr. Eldering testified as to the manner in which each element of those claims is met by PPC's CMP connector. (Tr. 828-31, 839-47.) Illustrations and charts were referred to during his testimony. (CDX-30,-65.) Portions of his opinion relied on testimony of Mr. McElroy with respect to the "inseparably coupling" element of the CMP

connector. (Tr. at 847.) The CMP has an engagement means circumscribing the interior of the outer collar and the exterior of the locking member. (Tr. 831:7-15, 844:1-13; CPX-45: CPX-31; CX-226; CDX-30; CDX-65.) The engagement means coacts in a circular interengagement to inseparably couple the locking member to the connector body at a first position and to accommodate limited axial movement of the locking member relative to the connector body between the first and a second position. (Tr. at 479:25, 480:7, 566:4-11; 827:17, 828:9, 831:7-15, 844:1-13, 845:13, 846:18, 847:9-13, 1173:16-22; CPX-31; CPX-45: CPX-97: CX-226: CDX-30; CDX-65.)

The CMP has a locking member that coacts in a first radially spaced relationship with the inner post when in a first position to accommodate insertion of the rear end of the inner post into the end of a cable, the central core portion of which is received in the inner post through the rear end and an outer annular portion of which is received in the annular chamber through the rear opening and between the locking member and the inner post. (Tr. at 831:7-15; 845:13, 846:9, CPX-45; CPX-31: CX-226: CDX-30; CDX-65.)

The locking member also coacts in radially spaced relationship with the inner post when in a second position to grip the outer annular portion of the cable in between. (Tr. at 831:7-15, 846:5-18; CPX-45; CPX-31; CX-226; CDX-30; CDX-65.)

Prior to and during installation on the cable, the CMP locking member does not completely and fully separate or detach from the connector body. (Tr. at 479:25, 480:7, 566:4-11; 1173:16-22; CPX-31: CPX-97.) Albeit that Mr. McElroy testified that the CMP connector does not separate under normal and ordinary circumstance, his testimony in that respect is not exclusive. Dr. Eldering's testimony establishes that the engagement means of the CMP

connector is fully in accordance with the '257 patent and achieves inseparable coupling of the locking member to the connector body at a first position.

Respondents' argument proceeds from a faulty premise: that element 'd' of claim 1 must be construed to require that the locking member be incapable of any detachment from the connector body. That construction was rejected in the claim construction analysis described above. As construed, element 'd' of claim 1 requires only that the locking member does not completely and fully separate or detach from the connector body prior to and during installation. The evidence shows that the locking member of the CMP connector does not completely and fully separate or detach from the connector body prior to or during installation.

Furthermore, there was no evidence presented at the hearing that PPC's CMP connectors ever separate, under any circumstance. Every indication from the evidence is that these CMP connectors do not separate, either during shipment, storage, handling, or installation on cable. The evidence in the record offers no opportunity for the fact finder to infer that the CMP connectors separate or detach at all, not even one percent of the time, or that it is "normal and ordinary" for PPC's CMP compression connectors to separate or detach during storage or shipment, as the Fu Ching Connectors sometimes do; or that the locking members sometimes pop off, as the Fu Ching Connectors do; or that the locking members can be detached in order to substitute them for a missing locking member on a different kind of connector, as is done with the accused Fu Ching Connectors.

From all of the evidence in this Investigation, it appears that PPC's CMP connectors literally are inseparable, because the locking member does not separate or detach from the connector body prior to or during installation on the cable. (CFF IV.D.14 (undisputed).)

Therefore, the Administrative Law Judge concludes that the PPC CMP connector practices claim 1 of the '257 patent.

Claim 5.

As discussed above, the Administrative Law Judge has found that the CMP connector practices claim 1 of the '257 patent. The Administrative Law Judge further finds that the undisputed evidence shows that the annular chamber of the CMP is closed at a first end by a circular flange extending radially between the inner post and outer collar. (CFF IV.D.13 (undisputed); Tr. at 846:19-847:8; CX-226; CDX-30; CPX-31; CPX-45.) Therefore the Administrative Law Judge finds that the CMP connector has all the limitations of claim 5 that require "[t]he end connector of claim 1 wherein said annular chamber is closed at a first end by a circular flange extending radially between said inner post and said outer collar."

3. '539 Patent.

PPC argues that its licensee's product, {

}, practices the claim of the '539 patent.[36] (CBr. at 88-89.) According to PPC, {

[36] In the Complaint, PPC argued that its EX connector practices the '539 patent. *See* Complaint, Ex. 44. PPC appears to have abandoned that argument. *See* Ground Rules 8.2, 11.1. Even if that were not the case, a review of Complaint Exhibit 44 and one of the EX6 connectors in CPX-46 (closed position) shows that the EX6 connector does not have "a single contrasting band of about the same width as the reduced diameter portion" or a portion of reduced diameter with a "sharp change in diameter as opposed to a gradual change." An ordinary observer would be able to tell that the contrasting band in the '539 patent design ends prior to the reduced diameter portion. The PPC EX6 connector's contrasting band tapers and continues into the reduced diameter portion. (*See* CPX-46; Complaint, Ex. 44.) Thus the two designs cannot be viewed as substantially similar.

PRACTICE CLAIM CHART FOR U.S. PATENT NO. D440,539
PPC EX CONNECTOR

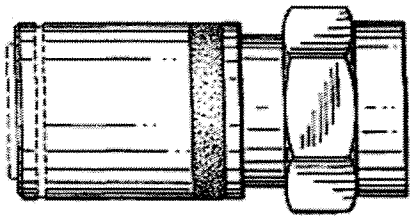

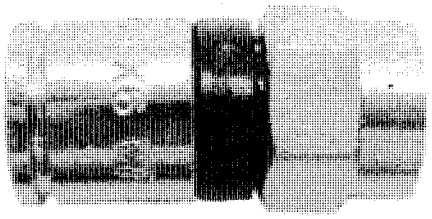

(Complaint, Ex. 44.)

} (*Id.* at 90; CFF VI.D.8 (undisputed).) In support of its assertion that the { } practices the '539 patent, PPC has submitted a side by side comparison of one of the figures of the '529 patent and the { } with certain physical features labeled (reproduced below). (CBr at 89.)

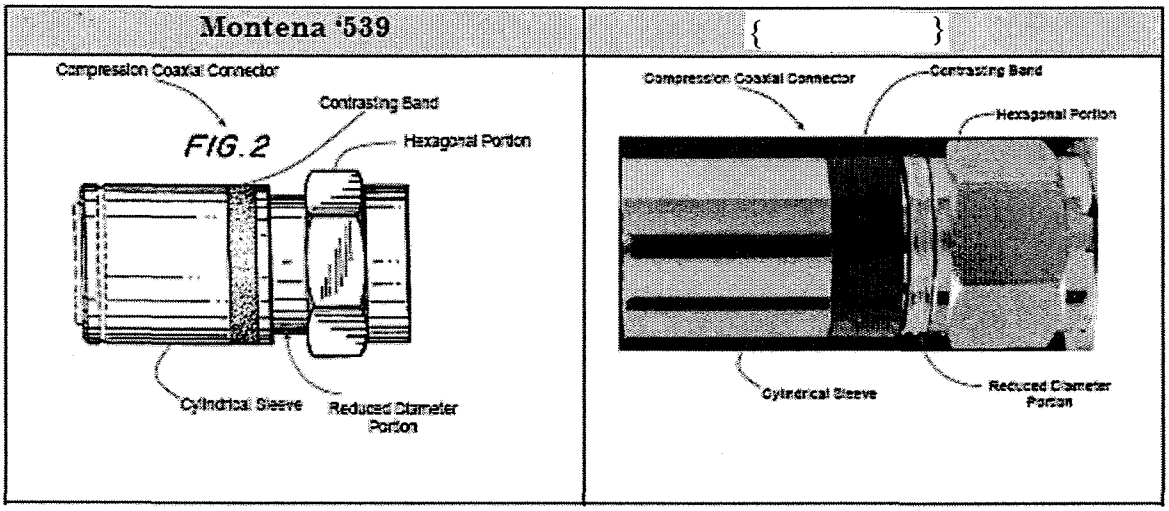

In addition, PPC provides testimony and a comparison chart by an "ordinary observer," Dr. Eldering. (Tr. at 688:1-691:21; CX-212; CDX-36; CPX-94.) In his chart, Dr. Eldering identifies the features from his characterization of the '539 patent in the { }

> The { } connector is a compression connector which, in the closed position, appears as a smooth cylinder of the same diameter from end to end, with the following exceptions: [t]he { } connector has a hexagonal portion toward one end; and [t]he { } connector has a portion of reduced diameter next to the hexagonal portion and near the center. The portion of reduced diameter in the { } connector has a sharp change in diameter as opposed to a gradual change. The { } connector has a constant color throughout except for a single contrasting band of about the same width as the reduced diameter portion. The contrasting band of the { } connector is generally centered and has the appearance of being substantially the same diameter as the overall cylinder. The end of the { } connector opposite the hexagonal portion is a relatively long cylindrical sleeve.

(CDX-36.) According to Dr. Eldering, the two designs are substantially similar. (Tr. at 690:5-11.) PPC also argues that the '539 patent covers a version of its EX series connector in the closed position (CBr. at 93), but presents no supporting evidence or analysis.

Staff argues that it is not clear whether the { } product is domestic. (SBr. at 30.) However, Staff notes that where "economic prong evidence is directed to licensing and litigation expenses . . . proof of the technical prong is not necessarily required." (*Id.*) Staff does not cite to any law to support either assertion.

The technical prong of the domestic industry requirement is in place to ensure that the activities of engineering, research and development, and licensing are actually related to the asserted intellectual property right. *Certain Stringed Musical Instruments and Components Thereof*, Inv. No. 337-TA-586, Comm'n Op. at 13-14 (U.S.I.T.C., May 16, 2008) ("*Stringed Instruments*"). Here, the Administrative Law Judge finds that PPC has established that the { } practices the '539 patent. The Administrative Law Judge further finds that PPC has established that it receives royalties from { } sales under a license agreement that includes the '539 patent. (Tr. at 185:20-186:1; 190:1-192:13 (Malak).) *See Certain Digital Processors and Digital Processing Systems, Components Thereof, and Products Containing Same*, Inv. No. 337-TA-559, Initial Determination at 85, 95 (U.S.I.T.C., May 11, 2007) (only a nexus between the activities supporting domestic industry and the asserted patent is required when complainant relies on the existence of a licensing program to satisfy subsection (C)) (unrev'd in relevant part). Accordingly, the Administrative Law Judge finds that the PPC has satisfied the technical prong of the domestic industry requirement with respect to the '539 patent.

4. '076 Patent.

The Administrative Law Judge has previously found that PPC has satisfied the technical domestic industry requirement with respect to the '076 patent. (Order No. 22 at 15.)

B. Economic Analysis

The economic prong of the domestic industry requirement is defined in subsection 337(a)(3) as follows:

> (3) For purposes of paragraph (2), an industry in the United States shall be considered to exist if there is in the United States, with respect to the articles protected by the patent, copyright, trademark or mask work concerned –
>
> (A) Significant investment in plant and equipment;
> (B) Significant employment of labor or capital; or
> (C) Substantial investment in its exploitation, including engineering, research and development, or licensing.

19 U.S.C. § 1337(a)(3). The economic prong of the domestic industry requirement is satisfied by meeting the criteria of any one of the three factors listed.

1. '194 Patent.

The Administrative Law Judge has previously found that PPC has satisfied the economic domestic industry requirement with respect to the '194 patent. (Order No. 22 at 12-13.)

2. '257 Patent.

The Administrative Law Judge has previously found that PPC has satisfied the economic domestic industry requirement with respect to the '257 patent. (Order No. 18 at 6.)

3. '539 Patent.

PPC argues that the facts relating to economic domestic industry with respect to the '539 patent are presumed true because PPC has only asserted this patent against Defaulting

Respondents.[37] (CBr. at 92.) In addition, PPC submits evidence relating to the scope of its economic domestic industry, including the following: (i) { } in research and development of the PPC EX series connector that PPC alleges is covered by the '539 patent; (ii) { } in litigation expenses in enforcing the '539 patent against { }; (iii) { }; (iv) { }; (v) litigation of the '539 patent against { }, which settled; and (vi) ongoing licensing negotiations involving the '539 patent. (CBr. at 93-94; Tr. at 190:1-192:13 (Malak); CFF VII.10-11 (undisputed); CFF VII.15-16 (undisputed); CFF VII.17; CFF VII.19 (undisputed); CFF VII.22 (undisputed); CFF VII.23.)

Staff agrees that the evidence shows that "PPC licenses the '539 patent and has expended significant resources in litigating that patent, { }." (SBr. at 31.) Staff also agrees that "the evidence shows that the licensing royalty[38] for the '539 design patent has been at least { }." (*Id.*) Staff argues that this evidence is insufficient to meet the economic domestic industry threshold, citing to review briefing by Commission Investigative Staff in *Certain Short-Wavelength Light Emitting Diodes, Laser Diodes and Products Containing Same*, Inv. No. 337-TA-640. (*Id.*)

The issue of whether the evidence submitted by PPC is sufficient to meet the economic domestic industry threshold is a close one. The undisputed evidence shows that PPC spent at least { } enforcing the '539 patent against {

[37] PPC is correct that for purposes of a limited exclusion order against Defaulting Respondent the facts in the Complaint establishing domestic industry are presumed true. 19 C.F.R. 210.16(c). However, PPC seeks a general exclusion order.

[38] Based on the citation to the transcript, Staff is likely referring to the { } and not licensing royalties. If this is in fact Staff's estimate as to how the { } in royalties may be attributed to the '539 patent, Staff does not provide any reasoning as to how it reached this figure.

} The evidence also shows that PPC spent an undisclosed amount of money and effort enforcing the '539 patent against { }, yet it is not clear that resolution of that litigation generated any positive settlement proceeds or royalties. It may also be inferred that at least some portion of Mr. Noah Montena's salary, plus his time, effort and use of PPC's equipment and facilities, is attributable to his development of the design that became the '539 patent. (Tr. at 395, 400.) This evidence shows PPC has made a substantial investment in enforcement of the '539 patent, as well as some investment in research and development and licensing. Notably, the Commission has expressly stated that "there is no minimum monetary expenditure that a complainant must demonstrate to qualify as a domestic industry under the 'substantial investment' requirement of [section 337(a)(3)(C)]." *Stringed Instruments*, at 25.

PPC's remaining arguments are completely unsupported. As discussed above, PPC abandoned its arguments[39] that its EX 6 and EX 6XL connectors practice the '539 patent (*see* Complaint at 24, Complaint Ex. 44) and thus the Administrative Law Judge cannot credit any portion of PPC's significant domestic investments in the EX product. Furthermore, PPC does not disclose whether { }. Finally, PPC fails to set forth facts showing how it has invested in ongoing negotiations for licenses of the '539 patent.

---

[39] Even if these arguments were not abandoned, the Administrative Law Judge found above that the EX6 connector design is not substantially similar to that of the '539 patent.

[40] A domestic industry may be established through the activity of a licensee. *Certain Methods of Making Carbonated Candy Products*, Inv. No. 337-TA-292 at 142 (U.S.I.T.C., December 8, 1989) (unrev'd in relevant part). { } According to Mr. White, "if it's not Corning and Gilbert, if it's not Thomas & Betts, if it's not PPC, then they're all offshore manufacturing." (Tr. at 645:10-13.)

Staff argues that enforcement activity does not constitute exploitation of the '539 patent under 19 U.S.C. § 1337(a)(3)(C). As Staff points out, this issue is currently being considered by the Commission in *Certain Short-Wavelength Light Emitting Diodes, Laser Diodes and Products Containing Same*, Inv. No. 337-TA-640 ("*Short-Wavelength LEDs*"). *See Short-Wavelength LEDs*, Notice of Comm'n Determination to Review an Initial Determination Granting Complainant's Motion for Summary Determination on the Domestic Industry Requirement at 2 (U.S.I.T.C., June 11, 2009). However, the Administrative Law Judge does not agree with Staff that PPC's enforcement activity is unrelated to its licensing efforts. Mr. Malak testified that it is PPC's practice to send cease and desist letters, as well as to engage in licensing or other business discussions, prior to protecting the economic value of its patents through litigation. (Tr. at 153:21-154:9, 157:12-158:9.) It is one of the realities of the marketplace that a company informed that it may be infringing a patent may seek to have that matter litigated in court rather than immediately negotiate a license agreement. If that is the case, then a pre-litigation license should not hold any more value with respect to domestic industry than a post-litigation license: if anything, the post-litigation license is more dearly bought. {

} Therefore the Administrative Law Judge finds that PPC has presented substantial, reliable and probative evidence that it has made substantial investment in the exploitation of the '539 patent such that the domestic industry requirement under 337(a)(3)(C) is satisfied.

4. '076 Patent.

The Administrative Law Judge has previously found that PPC has satisfied the economic domestic industry requirement with respect to the '076 patent. (Order No. 22 at 12-13.)

X. CONCLUSIONS OF LAW

1. The Commission has personal jurisdiction over the parties, subject-matter jurisdiction, and in rem jurisdiction over the accused Fei Yu '194 Connectors, Fu Ching Connectors, Fei Yu '257 Connectors, Fei Yu Model 039B connector, and Fei Yu Model 043 connector.
2. The importation or sale requirement of Section 337 is satisfied, except with respect to Defaulting Respondent ZE.[41]
3. All of the accused Fei Yu '194 Connectors listed in Section I.E. literally infringe asserted claim 1 of the '194 patent.
4. All of the accused Fei Yu '194 Connectors listed in Section I.E. literally infringe asserted claim 2 of the '194 patent.
5. None of the accused Fu Ching Connectors listed in Section I.E. literally infringe asserted claim 1 of the '257 patent.
6. None of the accused Fu Ching Connectors listed in Section I.E. literally infringe asserted claim 5 of the '257 patent.
7. All of the accused Fei Yu '257 Connectors listed in Section I.E. literally infringe asserted claim 1 of the '257 patent.
8. All of the accused Fei Yu '257 Connectors listed in Section I.E. literally infringe asserted claim 5 of the '257 patent.
9. The accused Fei Yu Model 043 connector literally infringes the asserted claim of the '539 patent.

[41] However, the importation or sale requirement of Section 337 is presumed satisfied for Defaulting Respondent ZE for purposes of a limited exclusion order. 19 C.F.R. § 210.16(c).

10. The accused Fei Yu Model 039B connector literally infringes the asserted claim of the '076 patent.
11. The asserted claims 1 and 5 of the '257 patent are not invalid under 35 U.S.C. § 102 for anticipation.
12. The asserted claims 1 and 5 of the '257 patent are not invalid under 35 U.S.C. § 103 for obviousness.
13. The asserted claims 1 and 5 of the '257 patent are not rendered unenforceable due to patent misuse.
14. Complainant is not equitably estopped from asserting claims 1 and 5 of the '257 patent.
15. A domestic industry exists, as required by Section 337.
16. With respect to Defaulting Respondents, it has been established that a violation exists of Section 337 for each of the '194, '257, '539, and '076 patents.
17. With respect to Respondents Gem and Fu Ching, it has been established that no violation exists of Section 337 for the '257 patent.

XI. INITIAL DETERMINATION AND ORDER

Based on the foregoing, it is the INITIAL DETERMINATION ("ID") of this Administrative Law Judge that with respect to Defaulting Respondents, a violation of Section 337 of the Tariff Act of 1930, as amended, has occurred in the importation into the United States, the sale for importation, or the sale within the United States after importation of certain coaxial cable connectors by reason of infringement of one or more of claims 1 and 2 of United States Patent No. 6,558,194, one or more of claims 1 and 5 of United States Patent No. 5,470,257, the claim of United States Patent No. D440,539, and the claim of United States Patent No. D519,076.

The Administrative Law Judge further determines that with respect to Respondents Gem and Fu Ching, no violation of Section 337 of the Tariff Act of 1930, as amended, has occurred in the importation into the United States, the sale for importation, or the sale within the United States after importation of certain coaxial cable connectors by reason of infringement of one or more of claims 1 and 5 of United States Patent No. 5,470,257.

The Administrative Law Judge further determines that a domestic industry exists that practices U.S. Patent Nos. 6,558,194, 5,470,257, D440,539, and D519,076.

Further, this ID, together with the record of the hearing in this Investigation consisting of:

(1) the transcript of the hearing, with appropriate corrections as may hereafter be ordered, and

(2) the exhibits received into evidence in this Investigation, as listed in the attached exhibit lists in Appendix A,

are CERTIFIED to the Commission. In accordance with 19 C.F.R. § 210.39(c), all material found to be confidential by the undersigned under 19 C.F.R. § 210.5 is to be given *in camera* treatment.

The Secretary shall serve a public version of this ID upon all parties of record and the confidential version upon counsel who are signatories to the Protective Order (Order No. 1) issued in this Investigation, and upon the Commission Investigative Attorney.

RECOMMENDED DETERMINATION ON REMEDY AND BOND

I. REMEDY AND BONDING

The Commission's Rules provide that subsequent to an initial determination on the question of violation of Section 337 of the Tariff Act of 1930, as amended, 19 U.S.C. § 1337, the Administrative Law Judge shall issue a recommended determination containing findings of fact and recommendations concerning: (1) the appropriate remedy in the event that the Commission finds a violation of Section 337, and (2) the amount of bond to be posted by respondents during Presidential review of Commission action under Section 337(j). *See* 19 C.F.R. § 210.42(a)(1)(ii).

A. Applicable Law.

The Commission may issue a remedial order excluding the goods of respondents found in violation of Section 337 (a limited exclusion order) or, if certain criteria are met, excluding all infringing goods regardless of the source (a general exclusion order). 19 U.S.C. § 1337(d); *Certain Hydraulic Excavators and Components Thereof*, Inv. No. 337-TA-582, Comm'n Op., at 15 (U.S.I.T.C., February 3, 2009) ("*Certain Excavators*").

1. General Exclusion Order.

A general exclusion order applies to persons who were not respondents in the investigation, and even to persons who could not have been respondents, such as persons who decide to import after the investigation is concluded. "Because of its considerable impact on international trade, potentially extending beyond the parties and articles involved in the investigation, more than just the interests of the parties is involved. Therefore, the Commission exercises caution in issuing general exclusion orders and requires that certain conditions be met

before one is issued." *Certain Agricultural Tractors Under 50 Power Takeoff Horsepower*, Inv. No. 337-TA-380, Comm'n Op., at 21 (U.S.I.T.C., March 12, 1997) ("*Under 50*"). A general exclusion order may issue in situations where—

> (A) a general exclusion from entry of articles is necessary to prevent circumvention of an exclusion order limited to products of named persons; or
>
> (B) there is a pattern of violation of this section and it is difficult to identify the source of infringing products.

19 U.S.C. § 1337(d)(2).[42]

PPC has not chosen to apply to the Commission for immediate relief against Defaulting Respondents in the form of a limited exclusion order pursuant to Section 337(g)(1), but instead is requesting that the Administrative Law Judge recommend a general exclusion order. For a limited exclusion order, "the Commission shall presume the facts alleged in the complaint to be true[,]"[43] but this presumption does not apply when general exclusion orders are sought, because such orders "are directed to goods from all sources, including future and unknown current importers." *Certain Plastic Molding Machines With Control Systems Having Programmable Operator Interfaces Incorporating General Purpose Computers, and Components Thereof*, Inv. No. 337-TA-462, Comm'n Op. at 6 (U.S.I.T.C., April 2, 2003) ("*Molding Machines*"). For the Commission to issue a general exclusion order in an investigation, regardless of whether there

---

[42] The Administrative Law Judge declines to implement the factors enumerated in *Certain Airless Paint Spray Pumps and Components Thereof* ("*Spray Pumps*"). *Certain Airless Paint Spray Pumps and Components Thereof*, Inv. No. 337-TA-90, Comm'n Op., 216 U.S.P.Q. 465, at 473 (U.S.I.T.C., Nov. 1981). The *Spray Pumps* opinion does not set out requirements for a general exclusion order. The Commission has expressly stated that "[c]onsideration of some factual issues or evidence examined in *Spray Pumps* may continue to be useful for determining whether the requirements of Section 337(d)(2) have been met. However, we do not view *Spray Pumps* as imposing additional requirements beyond those identified in Section 337(d)(2)." *Certain Excavators*, at 17. *See also Kyocera Wireless Corp. v. International Trade Comm'n*, 545 F.3d 1340, 1358 (Fed. Cir. 2008); *Certain Self-Cleaning Litter Boxes and Components Thereof*, Inv. No. 337-TA-625, Comm'n Op. at55 (U.S.I.T.C., April 28, 2009).

[43] 19 U.S.C. § 1337(g)(1).

are appearing or defaulting respondents,[44] a complainant must establish a Section 337 violation "by substantial, reliable, and probative evidence. . . ." 19 U.S.C. § 1337(g)(2)(B); 5 U.S.C. § 556; *Sildenafil*, Comm'n Op. on Remedy, the Public Interest, and Bonding at 4[45]; *Certain Foam Masking Tape*, Inv. No. 337-TA-528, Order No. 41 at 19-20 (U.S.I.T.C., June 21, 2005). Thus, for the remedy it seeks, PPC must show "by substantial, reliable, and probative evidence" that Defaulting Respondents have violated Section 337 with respect to the '194, '257, '539 and '076 patents.

2. Limited Exclusion Order.

A limited exclusion order instructs the U.S. Customs and Border Protection ("CBP") to exclude from entry all articles that are covered by the patents at issue and that originate from a named respondent in the investigation. *See* 19 U.S.C. § 1337(d). Where there are respondents in default, "the Commission shall presume the facts alleged in the complaint to be true" if a complainant seeks relief limited solely to defaulters. 19 U.S.C. § 1337(g)(1). Thus, a limited

---

[44] There is some question whether Section 337(g)(2) should apply instead of Section 337(d)(2), particularly with respect to the '194, '539 and '076 patents, as no respondent has appeared to contest PPC's allegations regarding those patents. In addition, the Commission has recently applied Section 337(g)(2) even where respondents did appear because they did not participate in the investigation. *See Certain Sucralose, Sweeteners Containing Sucralose, and Related Intermediate Compounds Thereof*, Inv. No. 337-TA-604, Comm'n Op. at 99-100 (U.S.I.T.C., April 28, 2009) ("*Certain Sucralose*"). However, the Administrative Law Judge need not reach a determination as to which of the two sections applies because the two sections essentially set forth the same standards.

[45] According to the Commission:

> We find that the issuance of a general exclusion order in the circumstances of this case is not governed by section 337(g)(2), since the provision expressly requires that no respondent appear to contest the investigation and it is clear that respondents Ezee and Biovea did. That no discovery may have been taken from those two respondents prior to action on their termination from the investigation does not change the fact of their appearance to contest the investigation. Section 337(g)(2) therefore cannot apply, and the proper legal framework is section 337(d)(2). However, the non-applicability of section 337(g)(2) does not affect the standard for finding a violation of section 337. This is because the adjudicative provisions of the Administrative Procedure Act, which apply to section 337 investigations, provide that a sanction or order may not be issued unless supported by "reliable, probative, and substantial evidence." 5 U.S.C. § 556. Thus, a violation of section 337 may not be found unless supported by "reliable, probative, and substantial evidence." We see no difference between this standard and the "substantial, reliable, and probative evidence" standard of section 337(g)(2).

Sildenafil, Comm'n Op. on Remedy, the Public Interest, and Bonding at 4.

exclusion order against Defaulting Respondents is available if PPC does not meet the heightened evidentiary burden for a general exclusion order.

B. Remedy with Respect to the '194 Patent.

PPC requests that a general exclusion order against compression connectors be issued because (i) such an order is necessary to prevent circumvention of a limited exclusion order and (ii) there is a pattern of violation of Section 337 and it is difficult to identify the source of infringing products. (CBr. at 99.) Staff agrees. (SBr. at 37.)[46]

While PPC's request is not specific to the '194 patent, the relevant inquiry is whether a general exclusion order should issue with respect to compression connectors that infringe claims 1 and 2 of the '194 patent. As PPC has only asserted this patent against Defaulting Respondents, PPC must show by substantial, reliable and probative evidence that there has been a Section 337 violation with respect to the Fei Yu '194 Connectors. In order to establish a "pattern of violation," PPC also argues that former Respondent Edali and certain non-respondents have imported or sold compression connectors that infringe claims 1 and 2 of the '194 patent.

A General Exclusion Order is Necessary to Prevent Circumvention of a Limited Exclusion Order.

First, the record supports PPC's assertion that a general exclusion order is necessary to prevent circumvention of a limited exclusion order. (CFF VIII.15-18 (undisputed); CFF VIII.20-31 (undisputed); CFF VIII.66-83 (undisputed).) With respect to Defaulting Respondents, at least three different entities participated in the sale for importation of the Fei Yu '194 Connectors, and a fourth entity shared the same contact information and advertised similar compression connectors on its website and at trade shows. (Order No. 22 at 6; CX-14; CX-16-19; Tr. at

[46] Respondents' post-hearing briefs only relate to the '257 patent and do not address the '194 patent.

326:18-335:18.) The overlapping location, personnel, and operations of these entities led Mr. Haube to believe that ZE, Yangzhou ZE and Yangzhou FTC were alter egos or aliases for Fei Yu. (Tr. at 335:11-18.) While the precise relationship among the four Defaulting Respondents is unclear, their demonstrated commonalities are indicative of the ease with which the individual(s) (*see* Tr. at 326:10-329:16) operating these entities could establish new companies[47] and continue to sell infringing compression connectors for importation if barred by a limited exclusion order.

This conclusion is further supported by the testimony of Mr. Brian Noll, a manager at PPC's subsidiary in China. Mr. Noll testified that in China, the licensing system makes it very common and inexpensive for individuals or families to operate Chinese companies under a number of different names. (Tr. at 1469-70.) Mr. Noll also testified that (i) the raw materials and manufacturing equipment for compression connectors are inexpensive and readily available in China; (ii) there is no difficulty in finding skilled labor or to train unskilled labor, and (iii) Chinese manufacturers are able to make compression connectors at minor expense by purchasing components from subcontractors and then completing the assembly with hand or air pressers. (Tr. at 1441-49.)[48] Furthermore, Mr. Noll testified that it would be easy for a company making compression connectors to evade a limited exclusion order:

---

[47] The Commission recently held that the likelihood of circumvention of a limited exclusion order due to the ease and frequency of name changes by Chinese companies, by itself, does not warrant a general exclusion order. *See Certain Ground Fault Circuit Interrupters and Products Containing Same,* Inv. No. 337-TA-615, Comm'n Op. at 25-26 (U.S.I.T.C., March 26, 2009) ("*Ground Fault Interrupters*"). However, in this instance, PPC does not rely solely on the ease and frequency with which it is possible to change the name or corporate structure of a Chinese company, and presents extensive evidence to show that a general exclusion order is necessary to prevent circumvention of a limited exclusion order.

[48] The Commission also held in *Ground Fault Interrupters* that a showing of the ease with which entrepreneurs can build facilities capable of producing the patented product is insufficient to establish that a general exclusion order is necessary to prevent circumvention of a limited exclusion order. *Ground Fault Interrupters*, at 27. In this instance, PPC has presented similar evidence, which serves to establish that the compression connector market has extremely low entry barriers. The Administrative Law Judge respectfully notes that this evidence is highly probative as it shows that entities named in a limited exclusion order could fully dissolve and rebuild from the ground up with little effort or expense, thereby circumventing the order. *See Certain Cigarettes and Packaging Thereof*, Inv. No. 337-TA-643, Comm'n Op. at 26 (U.S.I.T.C., October 1, 2009).

> Q. If you were successful in identifying the infringer and took steps against the copying, would it be easy for that company or any other copier to evade your efforts?
> A. Yes. In many cases, they would just pick up the operation and move, change the name of the company, take out a new business license, and be manufacturing within a relatively short period.
> Q. Would you -- could you give us an idea of how long it would take them.
> A. Probably about a week to 2 weeks to get the license. To move the equipment, only 2 or 3 days.
>
> * * *
>
> Q. Do the shear [sic] number of different company names under which Chinese individuals or families operate, and the ease of changing those names, contribute to the difficulty of enforcing intellectual property rights against Chinese infringers?
> A. Yes, it does.
> Q. In light of your testimony about the plant and equipment necessary to produce copying connectors or counterfeits, how difficult would it be for a Chinese connector assembly to move its manufacturing operation to a new location?
> A. Very easy.
> Q. What kind of equipment would be necessary to move it?
> A. They could probably pick it up by hand and move it on a truck.
>
> * * *
>
> Q. If only a limited exclusion order was issued, how would that affect the ability of manufacturers in China to continue to infringe upon your patents?
> A. It would only affect the people identified. And if they wanted to, they could change the name of the company and be producing very quickly.
> Q. And could they move their plants?
> A. Yes, they could.
> Q. And in your experience, has that sort of thing been done?
> A. Yes, it has.

(Tr. at 1468:8-19, 1470:17-1471:7, 1473:14-25.)

Other undisputed evidence shows that infringers would be motivated to circumvent a limited exclusion order because the compression connector market in the United States is profitable and growing. (CFF VIII.53-56 (undisputed).) In addition, PPC President and CEO John Mezzalingua testified that there are few entry barriers to prevent foreign competitors from selling infringing compression connectors in the United States:

> I have visited our competitors in the Orient, and there are small, little, in effect, garages that can make product and become a viable competitor by virtue of the four pieces that they can machine and ship to the US.
>
> * * *

> They come in at an extraordinarily low price. They have no R&D to contend with. They have no -- very little manufacturing costs. They've taken all of our know-how and embedded it in their product and aren't charging the customer for it.

(Tr. at 141:16-20, 143:16-20.) Furthermore, internet sales sites such as eBay already provide an established marketplace for sales and distribution of compression connectors to U.S. customers. (CFF VIII.52 (undisputed); CFF VIII.63 (undisputed); CFF VIII.70-74 (undisputed).) The above evidence shows it would be simple for foreign infringers to re-enter the compression connector market if barred by a limited exclusion order.

There Is a Pattern of Violation of Section 337 and It Is Difficult to Identify the Source of Infringing Products.

Second, the record supports PPC's assertion that a general exclusion order is warranted because there is a pattern of violation with respect to the '194 patent and it is difficult to identify the source of infringing products.

Pattern of Violation.

As discussed above, it is the Initial Determination of the Administrative Law Judge based on substantial, reliable and probative evidence that Defaulting Respondents Fei Yu, Yangzhou ZE and Yangzhou FTC, acting in concert, sold Fei Yu '194 Connectors for importation in violation of Section 337. While this finding alone is insufficient to establish a pattern of violation, PPC has presented other undisputed evidence to support its request for a general exclusion order.

PPC's former Vice President and General Counsel, Stephen Malak, testified that there have been two prior lawsuits relating to the '194 patent, both resulting in a verdict that the patent was valid and infringed. (Tr. at 181:12-183:21; CFF VII.95 (undisputed).) In addition, PPC sued two more companies over the '194 patent, ending the litigation when the companies took licenses. (Tr. at 192:17-193:11.) Although it is not clear from Mr. Malak's testimony whether

these prior cases involved imported coaxial cable connectors, such as those made by a foreign manufacturer, these four lawsuits demonstrate a more general pattern of unauthorized use.[49]

Mr. Malak further testified that PPC was actively engaged in sending cease and desist letters, a number of which involved allegations that imported connectors infringe the '194 patent. (Tr. at 153:21-156:23; CX-90C at PPC-TRIAL-001694-97, PPC-TRIAL-001701, PPC-TRIAL-001706-22.) According to Mr. Malak, in many cases these letters were successful in the withdrawal of the product of concern from company websites (*see* Tr. at 154:12-23, 156:6-11) and they occasionally resulted in the issuance of a license (*see* Tr. at 159:24-161:11). Mr. Malak also noted that overall PPC's strategy of litigation in the courts, cease and desist letters, and activity to remove products from online markets such as eBay (*see* Tr. at 200:2-16) was inadequate to stop the sale and importation of infringing coaxial cable connectors. (Tr. at 170:5-176:19) In the face of a growing number of internet web sites offering sales of infringing compression connectors, PPC sought relief from the International Trade Commission.

The most probative and persuasive evidence submitted by PPC relating to a widespread pattern of violation of the '194 patent, however, is that Edali[50] and certain non-respondents have been selling for importation, importing, or selling after importation coaxial cable connectors alleged to infringe claims 1 and 2 of the '194 patent. (CFF III.C.5.1-20 (undisputed); CFF III.C.8.1-III.C.12.20 (undisputed); CFF III.C.16.1-20 (undisputed); CFF III.C.19.1-20 (undisputed).) Dr. Eldering testified that he evaluated the Edali FPL-56 connector, the Pico

---

[49] PPC also presented evidence that it has succeeded in removing hundreds of ads selling "infringing products" on eBay, although it is again unclear whether these cases involved coaxial cable connectors of foreign manufacture. (CFF VIII.97 (undisputed).) The percentage of these products that were specifically alleged to infringe the '194 patent is also uncertain. PPC employee, Mr. White, provided general testimony that of samples collected from foreign suppliers at trade shows, nine out of ten suppliers have products that allegedly infringe the '194 and '257 patents. (Tr. at 632:3-633:1.)

[50] Former Respondent Edali was terminated from the Investigation based upon a consent order. Edali's stipulation which prompted termination states that it is "for settlement purposes only, and does not constitute an admission by Edali that an unfair act has been committed." (Order No. 5 at 3.)

Macom/Steren PermaSeal-II connector[51] sold by Sadoun Satellite Sales, the Smarthome 849306 F-RG6 PermaSeal-II connector,[52] and the Skywalker.com model SKY9950C connector[53] (collectively, the "Edali Connectors"), the Hangzhou Prevail Optoelectronic Equipment Co. Ltd. model nos. ZG052, ZG055, ZG057, ZG058 and ZG071[54] (collectively, the "Hangzhou Connectors"), and Zhejiang Cixi Winshow Equipment Co. Ltd. model no. FT020[55] (the "Zhejiang Connector"), and concluded that they met the limitations of the asserted claims of the '194 patent. (Tr. at 748:3-800:14; CX-216; CX-256; CX-261; CX-276-77; CX-278; CX-280; CPX-10; CPX-67; CPX-72; CPX-75; CPX-89; CPX-90; CDX-33; CDX-55-57; CDX-64.) Dr. Eldering also evaluated a number of other coaxial cable connectors, including the ShowMeCable INC-9900B, AV Outlet DC SOF6U-6-25, Wired Communications Perma-Seal, and Cable Wholesale ASF20004/ASF20006/ASF200007 connectors, and concluded they met the limitations of the asserted claims of the '194 patent--although PPC's assertion that these connectors were sold for importation, imported, or sold after importation is not as well-supported by the evidence. (Tr. at 748:3-800:14; CFF VIII.104 (undisputed in relevant part); CPX-74; CPX-77; CPX-83; CDX-56.)

Taken together, the above evidence establishes a pattern of violation with respect to the '194 patent. This pattern of violation is explained by the business conditions found to exist by the Administrative Law Judge above in the discussion relating to circumvention of a limited exclusion order, including an established demand for compression connectors, inexpensive and

---

[51] PPC submitted correspondence from Pico Macom that indicates that Edali supplies it with the PermaSeal-II series compression connectors. (Complaint, Ex. 15, Ex. A at 1.)

[52] (*See* Complaint, Ex. 15, Ex. A at 1; CX-264 at PPC-TRIAL-003857.)

[53] Mr. Malak testified that Skywalker Communications indicated it was getting its products from Edali in Taiwan. (Tr. at 160:12-15.)

[54] These models were purchased directly from the company in China. (CFF VIII.104 (undisputed in relevant part); CX-280.)

[55] The FT020 samples were purchased directly from the company in China. (CFF VIII.104 (undisputed in relevant part); CX-276-77.)

readily available raw materials, manufacturing equipment and labor, the ready supply of pre-made and inexpensive components, a profitable market, and an established marketplace on the internet.

Difficult to Identify the Source of Infringing Products.

The Administrative Law Judge further finds that it is difficult to identify the source of products infringing the '194 patent. Mr. Malak testified that when PPC sent cease-and-desist letters to companies, even if there was a positive response, the companies would not reveal their suppliers:

> Q. Okay. And what was one of the earlier cease-and-desist letters that you sent out in this program?
> A. I -- I believe that one of the earliest ones that we sent a letter out was to Qwest. I believe they're located in Florida. I may be wrong. And Qwest got back to us taking a position that they didn't feel that they infringed. But they said they would remove the product from the market. I asked whether or not they would tell us who the supplier was, and they would not reveal the name of the supplier other than saying it was an Asian company.
> Q. How frequently would you attempt to identify suppliers or upstream manufacturers of the goods that pertain to your cease-and-desist campaign?
> A. In every instance, we attempted to determine the supplier. And it was only in a few instances where the company would be willing to, either directly or through their attorney, advise us as to the Taiwanese or Chinese supplier.

(Tr. at 156:3-23 (emphasis added).) In addition, Mr. Andrew White, PPC's Vice President of Satellite Sales, Retail Services and Structured Wiring, testified that the internet is a significant method for marketing and selling compression connectors and that he monitors online marketplaces to look for products that appear to infringe PPC's patents. (Tr. at 618.) According to Mr. White, it is difficult to identify the source of connectors sold on the internet:

> Q. I ask you to look at page 001592 [of Exhibit CX-84] and ask you if that is a Web site which you visited?
> A. Yes, it is a Web site I visited.
> Q. And what is the company on that Web site?

A. This -- this particular Web site, you can't determine which company it is or which connector it is. But it was done through Amazon that took you to another Web site from a company called -- or a Web page called Parts Express.
Q. And did that Web site offer compression connectors that appeared to infringe PPC's patents?
A. Yes.
Q. Did the Web site show a compression connector that appeared to infringe the EX patent?
A. Yes, that's correct.
Q. And what compression connector was shown?
A. Again, it's not identified. It just says F RG6 compression connector. And it's, again, it's marketed by a company -- or a Web page called Parts Express through Amazon.com.
Q. Did the Web site show a name for a manufacturer for that compression connector?
A. It does not.
Q. Did it show a name for the vendor for that compression connector?
A. Well, again it's done through Amazon through Parts Express. So I'm not sure who's -- I'm assuming Parts Express is the vendor but cannot really identify that.
Q. I ask you to examine page 1590 of Exhibit CX-84.
A. Okay.
Q. Is that the Web site for Installer Oasis that you visited?
A. Yes, it is.
Q. And did that Web page offer compression connectors that appeared to infringe PPC's patents?
A. Yes, that's correct.
Q. And what did it show?
A. It shows -- it appears it shows an RG6 connector. That's what they're saying it is. It's called the RidgeLoc compression F connector.
Q. And did that appear to you to be a copy of a PPC EX connector?
A. Yes.
Q. Are the Web sites that you have just discussed and visited the only Web sites or all of the Web sites on the Internet offering compression connectors similar to those covered by PPC's EX and CMP patents?
A. No, this is just a small handful of Web sites. If you Google "F compression connectors" on the Internet, you get hundreds of pages loaded in there on compression connectors. So this is just three or four different Web sites. So it's -- this is just a very small segment of this.
Q. From visiting these various Web sites, have you found that it is easy to identify the actual manufacturers of compression connectors shown on those Web sites?
A. Some it's very easy because some of them are ours, unfortunately, that are products stolen in the marketplace, and some of our main competitors. The majority of them I would have to say they're very hard to identify who the manufacturer or the supplier are of these particular connectors.
Q. Why is it difficult to identify the manufacturers on these Web sites?

> A. Because they're -- normally they don't list the name of the manufacturer or the part number or something similar to that. The -- our everyday competitors that are US based competitors we can identify through their names and through what the connector looks like. But most of these Web sites, typically they're offshore connectors, very hard to identify who the manufacturer is because they're not listed. So it's very challenging.

(Tr. at 622:20-625:22 (emphasis added); CX-84.) In particular, Mr. White testified that products were marketed on eBay that purported to be PPC products but that he could tell were not PPC products because of the way they were packaged. (Tr. at 627:3-16.) The manufacturers of those connectors, marked and marketed as PPC products, would be very difficult to identify.

The testimony of Mr. Noll, while not specific to products infringing the '194 patent, also demonstrates the difficulty of identifying infringers. According to Mr. Noll:

> Q. Besides these companies, do you have knowledge of other companies producing copies of PPC connectors?
> A. Yes.
> Q. Can you provide their names.
> A. We have been unable to identify some of those. We recently were buying some packaging equipment. We sent samples to the company to give us a quotation on a new bagging equipment. They said they are already making a -- already have made a machine for another company that bags the same components. And they sent us a picture. And the picture was exactly our CMPG.
> Q. Your CMPG?
> A. Yes.
> Q. Did this company identify the manufacturer of those connectors?
> A. No. They refused to.
> Q. Did you ask them to?
> A. Yes, we did.
> Q. And did they refuse to disclose that to you?
> A. Yes, they did.
>
> * * *
>
> Q. Have you experienced other situations where Chinese companies attempted to conceal their connector manufacturing activity from PPC?
> A. Yes.
> Q. Could you describe that.
> A. We went to visit one of our subcomponent manufacturers. We knew on their Web site that they had produced connectors. When we toured the plant, it was very difficult to get in the plant in the beginning. It took us weeks to convince them that we wanted to see their capabilities because of our IS0 requirements.

> They finally let us into the facility. But they would not let us into one other building that they had. They said that was proprietary information.
> Q. And did you find out whether they were assembling complete connectors at that facility?
> A. Their Web site indicated that they do.
> Q. Why would a component vendor want to expand its operations to include manufacturing of finished connectors, if you know?
> A. To expand the organization for more profit.
> Q. Do you know why a component vendor would conceal the fact that it is also making finished connectors?
> A. Yeah. They probably don't want to lose our business in the component manufacturing. So they're not going to tell us that they're competing with us at the same time.

(Tr. at 1449:9-1451:17.) In Mr. Noll's experience, Chinese manufacturers of connectors that copy the PPC EX and CMP series connectors do not provide identifying markings or sometimes "mismark" connectors with PPC's name. (Tr. at 1455:9-1456:25; 1468:1-7; CX-307.)

For the reasons discussed above, the Administrative Law Judge finds that a general exclusion order with respect to compression connectors that infringe claims 1 and 2 of the '194 patent is warranted because such an order is necessary to prevent circumvention of a limited exclusion order. In addition, there is a pattern of violation with respect to the '194 patent and it is difficult to identify the source of infringing products.

C. Remedy with Respect to the '257 Patent.

PPC requests that a general exclusion order against compression connectors be issued because (i) such an order is necessary to prevent circumvention of a limited exclusion order and (ii) there is a pattern of violation of Section 337 and it is difficult to identify the source of infringing products. (CBr. at 99.) Staff agrees. (SBr. at 37.) Respondents argue that as they have not infringed the '257 patent, no general order should issue. (RBr. at 72.)

While PPC's request is not specific to the '257 patent, the relevant inquiry is whether a general exclusion order should issue with respect to compression connectors that infringe claims

1 and 5 of the '257 patent. As found above in the Initial Determination, Respondents Fu Ching and Gem do not infringe the '257 patent. However, the Administrative Law Judge further found by substantial, reliable and probative evidence that there has been a Section 337 violation with respect to the Fei Yu '257 Connectors. In order to establish a "pattern of violation," PPC also argues that certain nonrespondents have imported or sold compression connectors that infringe claims 1 and 5 of the '257 patent.

Circumvention of a Limited Exclusion Order.

As discussed above, at least three different entities among Defaulting Respondents participated in the sale for importation of the Fei Yu '257 Connectors, and a fourth entity shared the same contact information and advertised similar compression connectors on its website and at trade shows. (Order No. 22 at 6; CX-14; CX-16-19; Tr. at 326:18-335:18.) The overlapping location, personnel, and operations of these entities led Mr. Haube to believe that ZE, Yangzhou ZE and Yangzhou FTC were alter egos or aliases for Fei Yu. (Tr. at 335:11-18.) While the precise relationship among the four Defaulting Respondents is unclear, their demonstrated commonalities are indicative of the ease with which the individual(s) (see Tr. at 326:10-329:16) operating these entities could establish new companies and continue to sell infringing compression connectors for importation if barred by a limited exclusion order.

In addition, as discussed in detail above with respect to remedy for the '194 patent, the testimony of Mr. Noll supports a conclusion that it would be easy for a foreign company making compression connectors to evade a limited exclusion order. (Tr. at 1441-49, 1468:8-1471:7, 1473:14-25.) Other undisputed evidence outlined above shows that infringers would be motivated to circumvent a limited exclusion order, and that market entry barriers are low. (CFF VIII.52-56 (undisputed); CFF VIII.63 (undisputed); CFF VIII.70-74 (undisputed); Tr. at 141:16-

20, 143:16-20 (Mezzalingua).) The Administrative Law Judge finds that the evidence supports a recommendation with respect to the '257 patent that a general exclusion order is necessary to prevent circumvention of a limited exclusion order.

Pattern of Violation, Difficult to Identify the Source of Infringing Products.

As discussed above, it is the Initial Determination of the Administrative Law Judge based on substantial, reliable and probative evidence that Defaulting Respondents Fei Yu, Yangzhou ZE and Yangzhou FTC, acting in concert, sold Fei Yu '257 Connectors for importation in violation of Section 337. While this finding alone is insufficient to establish a pattern of violation, PPC has presented other undisputed evidence to support its request for a general exclusion order.

Mr. Malak testified that PPC was actively engaged in sending cease and desist letters, a number of which involved allegations that imported connectors infringe the '257 patent. (Tr. at 153:21-159:6; CX-90C at PPC-TRIAL-001681-93, PPC-TRIAL-001710-13.) According to Mr. Malak, in many cases these letters were successful in the withdrawal of the product of concern from company websites (*see* Tr. at 154:12-23, 156:6-11) although PPC does not assert that the '257 patent has ever been licensed (*see* Complaint, Ex. 10).

The most probative and persuasive evidence submitted by PPC relating to a widespread pattern of violation of the '257 patent, however, is that certain non-respondents have been selling for importation, importing, or selling after importation coaxial cable connectors alleged to infringe claims 1 and 5 of the '257 patent. (CFF IV.C.4.1-IV.C.11.14 (undisputed); CFF IV.C.12.1-14; CFF IV.C.15.1-CFF IV.C.27.14 (undisputed).)

Ariza.

Dr. Eldering testified that he evaluated the Ariza Technology Model No. FY039-B connector (the "Ariza Connector") and concluded that it meets all of the limitations of the asserted claims of the '257 patent. (Tr. at 883:8-895:24 (Eldering); CDX-55; CPX-68. *See also* Tr. at 533:8-535:1 (McElroy); CPX-111.) Dr. Eldering noted that the Ariza Connector has an internally threaded cylindrical nut for a fastener (Tr. at 891:7-19), a shoulder(50a) with a rear face (*id.* at 892:5-10) that circumscribes the exterior of the locking member (*id.* at 892:892:5-12) and coacts in circular interengagement with an internal groove (52) (*id.* at 893:9-11) circumscribing the interior of the outer collar (*id.* at 892:10-12). Ariza Technology ("Ariza") is a domestic company (*see* CX-257; CX-291 at PPC-TRIAL-004845 at line 545), however, the model number of the product suggests that Ariza sold PPC a Fei Yu Model 039B Connector. In addition, while model numbers are not listed, the PIERS data submitted by PPC shows that Ariza imported 114 cartons of metal connectors from Defaulting Respondent Yangzhou ZE on 9/19/07 at an estimated value of $103,022.03. (CX-291 at PPC-TRIAL-004845 at line 545.) The Administrative Law Judge finds that, for purposes of demonstrating a pattern of violation only, PPC has produced sufficient evidence to show that the imported Ariza Connector meets the elements of claims 1 and 5 of the '257 patent as construed above and would likely violate Section 337.

Cable Wholesale.

Dr. Eldering testified that he evaluated the Cable Wholesale model ASF-20028 and ASF-20032 connectors (the "CW Connectors") and concluded that they meet all of the limitations of the asserted claims of the '257 patent. (Tr. at 896:11-899:6, 1132:14-1135:25 (Eldering); CDX-55; CPX-74.) Dr. Eldering specifically noted that on the ASF-20032 model the fastener is an

internally threaded cylindrical nut (Tr. at 1134:17-18), although both models appear to have similar F-connector male fasteners. (CDX-55 at PPC-TRIAL-005133; CPX-74.) The Administrative Law Judge finds that, for the same reasons that the Fu Ching Connectors do not infringe, the ASF-20032 model does not appear to have the engagement means structure as disclosed in the '257 patent specification. (*See* CDX-55 at PPC-TRIAL-005135). However, the Administrative Law Judge does find that the ASF-20028 model meets element 'd' of claim 1 of the '257 patent. PPC's assertion that the CW Connectors were sold for importation, imported, or sold after importation is not as well-supported by the evidence as the Ariza Connector (*see* CFF VIII.104)[56], although the CW Connector model ASF-20028 serves to demonstrate a more general pattern of violation.

CablesNMor.

Dr. Eldering testified that he evaluated the CablesNMor.com model X21001 connector (the "CNM Connector") and concluded that it meets all of the limitations of the asserted claims of the '257 patent. (Tr. at 899:19-905:5 (Eldering); CDX-55; CPX-73. *See also* Tr. at 535:2-537:4 (McElroy); CPX-112.) The invoice identifies the CNM Connector as an F RG6 PermaSeal I connector. (CX-262 at PPC-TRIAL-003821.) PPC asserts that the PermaSeal I connector is a Steren brand that is supplied to Steren Electronics by Fu Ching. (CFF VIII.104; Complaint, Ex. 14 at ¶¶8, 11; *id.*, Ex. 14 at Ex. B.) The Administrative Law Judge finds that, for purposes of demonstrating a pattern of violation only, PPC has produced sufficient evidence to show that the imported CNM Connector meets the elements of claims 1 and 5 of the '257 patent as construed above and would likely violate Section 337.

[56] PPC speculates that the ASF-20028 is a PermaSeal I connector, and thus allegedly supplied by Fu Ching, because it is marked Steren PermaSeal. However, there could be more PermaSeal models than just the I and II. PPC also speculates that the ASF-20032 is a Fu Ching connector because it has a copper cap. This model is not marked with Fu Ching's patent. The Administrative Law Judge finds that the evidence identified in CFF VIII.104 does not conclusively demonstrate that the Cable Wholesale Connectors originated abroad.

Hangzhou Prevail.

Dr. Eldering testified that he evaluated the Hangzhou Prevail Optoelectronic Equipment Company model WL/ZG048, WL/ZG050, WL/ZG053, WL/ZG060, WL/ZG062, WL/ZG065, WL/ZG070 connectors (the "Hangzhou '257 Connectors") and concluded that they meet all of the limitations of the asserted claims of the '257 patent. (Tr. at 905:6-925:14 (Eldering); CDX-55; CPX-90.) Dr. Eldering specifically noted that all the Hangzhou '257 Connectors, except for the WL/ZG065 model, have an internally threaded cylindrical nut for a fastener. (Tr. at 910:1-5, 912:18-20, 920:14-20, 924:21-22 (Eldering).) Staff argues that the WL/ZG065 model that has a BNC type fastener does not meet the fastener means limitation of claim 1 of the '257 patent. (SOCFF IV.C.12.1; SOCFF IV.C.12.1.1; SOCFF IV.C.12.1.2; Tr. at 920:15-16 (Eldering).) The Administrative Law Judge finds that the BNC type fastener does not perform the function of connecting the end connector to the system component in the same way as the structure disclosed in the '257 patent specification, and therefore the WL/ZG065 model does not infringe the '257 patent. (*See* Initial Determination Section IV.C.1.a)(3) above.) All of the Hangzhou '257 Connectors were purchased directly from the company in China. (CFF VIII.104; CX- 280 at PPC-TRIAL-004960.) The Administrative Law Judge finds that, for purposes of demonstrating a pattern of violation only, PPC has produced sufficient evidence to show that the imported Hangzhou' 257 Connectors, with the exception of the WL/ZG065 model, meet the elements of claims 1 and 5 of the '257 patent as construed above and would likely violate Section 337.

MonoPrice.

Dr. Eldering testified that he evaluated the MonoPrice model 2976, 2973, and 2978 connectors (the "MonoPrice Connectors") and concluded that they meet all of the limitations of the asserted claims of the '257 patent. (Tr. at 925:21-935:12 (Eldering); CDX-55; CPX-80;

CPX-81.) Dr. Eldering noted that the MonoPrice Connectors have an internally threaded cylindrical nut for a fastener. (Tr. at 925:2-3, 931:16-18, 934:14-20 (Eldering).) PPC presents some evidence supporting its assertion that the MonoPrice connectors may have been sold for importation, imported, or sold after importation (*see* CFF VIII.104; CX-269; CX-289 at PPC-TRIAL-004579 rows 14491-98), although this evidence is not conclusive. At a minimum, the Administrative Law Judge finds that the MonoPrice Connector serves to demonstrate a more general pattern of violation.

Zhejiang Cixi.

Dr. Eldering testified that he evaluated the Zhejiang Cixi Winshow Equipment Company model FT018 and FT019 connectors (the "Winshow Connectors") and concluded that they meet all of the limitations of the asserted claims of the '257 patent. (Tr. at 935:13-941:14 (Eldering); CDX-55; CPX-87; CPX-88.) Dr. Eldering noted that the Winshow Connectors have an internally threaded cylindrical nut for a fastener. (Tr. at 937:13-14, 940:7-8 (Eldering).) PPC purchased the Winshow Connectors from Cixi Weishi Equipment Co., Ltd. in China. (CX-276; CX-277.) The Administrative Law Judge finds that, for purposes of demonstrating a pattern of violation only, PPC has produced sufficient evidence to show that the imported Winshow Connectors meet the elements of claims 1 and 5 of the '257 patent as construed above and would likely violate Section 337.

Action Electronics.

Dr. Eldering testified that he evaluated the Action Electronics PL-18006 connector (the "Action Connector") and concluded that it meets all of the limitations of the asserted claims of the '257 patent. (Tr. at 1123:15-1127:25 (Eldering); CDX-55; CPX-78.) Dr. Eldering noted that the Action Connector has an internally threaded cylindrical nut for a fastener. (Tr. at 1126:20-22

(Eldering).) The Administrative Law Judge finds that, for the same reasons that the Fu Ching Connectors do not infringe, the Action Connector does not appear to have the engagement means structure as disclosed in the '257 patent specification. (*See* CDX-55.) The Action Connector is marked with U.S. Patent No. 6,241,553. (CFF VIII.104; CPX-78.) Fu Ching marks its coaxial cable connectors with the number of U.S. Patent No. 6,241,553. (CFF IV.C.28.24 (undisputed).)

Paladin.

Dr. Eldering testified that he evaluated the Amazon.com Paladin 9646 connector (the "Paladin Connector") and concluded that it meets all of the limitations of the asserted claims of the '257 patent. (Tr. at 1129:16-1132:13 (Eldering); CDX-55; CPX-66.) The Administrative Law Judge finds, however, that, for the same reasons that the Fu Ching Connectors do not infringe, the Paladin Connector does not appear to have the engagement means structure as disclosed in the '257 patent specification. (*See* CDX-55 at PPC-TRIAL-005115-16.) PPC argues that the Paladin Connector "is a Fu Ching style (FCS) in its construction, but it does not have the [Fu Ching] U.S. Patent No. marked on the connector." (CFF VIII.104.) PPC does not present sufficient evidence to show importation.

CablesToGo.com.

Dr. Eldering testified that he evaluated the CablesToGo.com model DCF6-20 connector (the "CablesToGo Connector") and concluded that it meets all of the limitations of the asserted claims of the '257 patent. (Tr. at 1136:1-1138:24 (Eldering); CDX-55; CPX-63.) Dr. Eldering noted that the CablesToGo Connector has an internally threaded cylindrical nut for a fastener. (Tr. at 1137:24-1138:1 (Eldering).) The Administrative Law Judge finds that, for the same reasons that the Fu Ching Connectors do not infringe, the CablesToGo Connector does not appear to have the engagement means structure as disclosed in the '257 patent specification.

(*See* CDX-55 at PPC-TRIAL-005149.) The CablesToGo Connector is marked with Fu Ching's U.S. Patent No. 6,241,553. (CFF VIII.104; CPX-63.)

Cansky.

Dr. Eldering testified that he evaluated the Cansky Electronics model 211021 connector (the "Cansky Connector") and concluded that it meets all of the limitations of the asserted claims of the '257 patent. (Tr. at 1138:25-1141:18 (Eldering); CDX-55; CPX-86.) Dr. Eldering noted that the Cansky Connector has an internally threaded cylindrical nut for a fastener. (Tr. at 1140:25-1141:2 (Eldering).) The Administrative Law Judge finds that, for the same reasons that the Fu Ching Connectors do not infringe, the Cansky Connector does not appear to have the engagement means structure as disclosed in the '257 patent specification. (*See* CDX-55 at PPC-TRIAL-005157.) The Cansky Connector was purchased directly from Ningbo Free Trade Zone Cansky Electronics Co., Ltd. in China. (CX-275.)

ComputerCableStore.com.

Dr. Eldering testified that he evaluated the ComputerCableStore.com model 1-GF6PQCM-010 Gem Compression connector (the "ComputerCableStore Connector") and concluded that it meets all of the limitations of the asserted claims of the '257 patent. (Tr. at 1141:19-1144:18 (Eldering); CDX-55; CPX-84; CX-273.) Dr. Eldering noted that the ComputerCableStore Connector has an internally threaded cylindrical nut for a fastener. (Tr. at 1143:17-20 (Eldering).) The Administrative Law Judge finds that, for the same reasons that the Fu Ching Connectors do not infringe, the ComputerCableStore Connector does not appear to have the engagement means structure as disclosed in the '257 patent specification. (*See* CDX-55 at PPC-TRIAL-005162.) ComputerCableStore identifies its ComputerCableStore Connector as a Gem connector. (CX-273.) In addition, the packaging is labeled Gem Electronics and the

ComputerCableStore Connector is marked with U.S. Patent No. 6,241,553. (CPX-84.) Fu Ching marks its coaxial cable connectors with the number of U.S. Patent No. 6,241,553. (CFF IV.C.28.24 (undisputed).)

MCM Electronics.

Dr. Eldering testified that he evaluated the MCM Electronics model FC-710A1-OB connector (the "MCM Connector") and concluded that it meets all of the limitations of the asserted claims of the '257 patent. (Tr. at 1167:17-1171:2 (Eldering); CDX-55; CPX-76.) Dr. Eldering noted that the MCM Connector has an internally threaded cylindrical nut for a fastener. (Tr. at 1170:1-2 (Eldering).) The Administrative Law Judge finds that, for the same reasons that the Fu Ching Connectors do not infringe, the MCM Connector does not appear to have the engagement means structure as disclosed in the '257 patent specification. (*See* CDX-55 at PPC-TRIAL-005215.) The MCM Connector is marked with U.S. Patent No. 6,241,553. (CPX-76.) Fu Ching marks its coaxial cable connectors with the number of U.S. Patent No. 6,241,553. (CFF IV.C.28.24 (undisputed).)

Summit Source.

Dr. Eldering testified that he evaluated the Summit Source Steren 200-032 Perma-Seal connector (the "Summit Source Connector") and concluded that it meets all of the limitations of the asserted claims of the '257 patent. (Tr. at 1171:3-1174:17 (Eldering); CDX-55; CPX-64.) Dr. Eldering noted that the Summit Source Connector has an internally threaded cylindrical nut for a fastener. (Tr. at 1173:7-11 (Eldering).) The Administrative Law Judge finds that, for the same reasons that the Fu Ching Connectors do not infringe, the Summit Source Connector does not appear to have the engagement means structure as disclosed in the '257 patent specification. (*See* CDX-55 at PPC-TRIAL-005242-43.) The Summit Source Connector is marked with U.S.

Patent No. 6,241,553. (CFF VIII.104; CPX-64.) Although PPC notes that the package was labeled "Made in U.S.A.," Fu Ching marks its coaxial cable connectors with the number of U.S. Patent No. 6,241,553. (CFF IV.C.28.24 (undisputed).)

Tessco.

Dr. Eldering testified that he evaluated the Tessco Wireless Solutions model 415537 connector (the "Tessco Connector") and concluded that it meets all of the limitations of the asserted claims of the '257 patent. (Tr. at 1174:18-1177:11 (Eldering); CX-268; CDX-55; CPX-79.) Dr. Eldering noted that the Tessco Connector has an internally threaded cylindrical nut for a fastener. (Tr. at 1176:12-15 (Eldering).) The Administrative Law Judge finds that, for the same reasons that the Fu Ching Connectors do not infringe, the Tessco Connector does not appear to have the engagement means structure as disclosed in the '257 patent specification. (*See* CDX-55 at PPC-TRIAL-005249-50.) The Tessco Connector is marked with U.S. Patent No. 6,241,553. (CFF VIII.104; CPX-79.) Fu Ching marks its coaxial cable connectors with the number of U.S. Patent No. 6,241,553. (CFF IV.C.28.24 (undisputed).)

While not every product of non-respondents appears to infringe the '257 patent, taken together, the Administrative Law Judge finds that there is sufficient evidence noted above with respect to the Fei Yu '257 Connectors, PPC's cease and desist activities, the Ariza Connector, the CW Connector model ASF-20028, the CNM Connector, the Hangzhou' 257 Connectors (except the WL/ZG065 model), the MonoPrice Connector, and the Winshow Connectors to establish a pattern of violation with respect to the '257 patent. This pattern of violation is explained by the business conditions found to exist by the Administrative Law Judge above in the discussion relating to circumvention of a limited exclusion order, including an established demand for compression connectors, inexpensive and readily available raw materials,

manufacturing equipment and labor, the ready supply of pre-made and inexpensive components, a profitable market, and an established marketplace on the internet.

Difficult to Identify the Source of Infringing Products.

The Administrative Law Judge further finds that it is difficult to identify the source of products infringing the '257 patent. As discussed above with respect to the '194 patent, Mr. Malak testified that when PPC sent cease-and-desist letters to companies, even if there was a positive response, the companies would not reveal their suppliers. (Tr. at 156:3-23.) In addition, Mr. White testified that the internet is a significant method for marketing and selling compression connectors and that he monitors online marketplaces to look for products that appear to infringe PPC's patents. (Tr. at 618.) According to Mr. White, it is difficult to identify the source of connectors sold on the internet. (Tr. at 622:20-625:22; CX-84.) In particular, Mr. White testified that products were marketed on eBay that purported to be PPC products but that he could tell were not PPC products because of the way they were packaged. (Tr. at 627:3-16.) The manufacturers of those connectors, marked and marketed as PPC products, would be very difficult to identify.

The testimony of Mr. Noll, while not specific to products infringing the '257 patent, also demonstrates the difficulty of identifying infringers. (Tr. at 1449:9-1451:17.) In Mr. Noll's experience, Chinese manufacturers of connectors that copy the PPC EX and CMP series connectors do not provide identifying markings or sometimes "mismark" connectors with PPC's name. (Tr. at 1455:9-1456:25; 1468:1-7; CX-307.)

For the reasons discussed above, the Administrative Law Judge finds that a general exclusion order with respect to compression connectors that infringe claims 1 and 5 of the '257 patent is warranted because such an order is necessary to prevent circumvention of a limited

exclusion order. In addition, there is a pattern of violation with respect to the '257 patent and it is difficult to identify the source of infringing products.

D. Remedy with Respect to the '539 Patent.

Without any specificity as to the asserted patents, PPC requests that a general exclusion order against compression connectors be issued because (i) such an order is necessary to prevent circumvention of a limited exclusion order and (ii) there is a pattern of violation of Section 337 and it is difficult to identify the source of infringing products. (*See* CBr. at 99.) Staff argues that if there has been a Section 337 violation with respect to the '539 patent, only a limited exclusion order should issue against Defaulting Respondents because "the evidence does not show a widespread pattern of unauthorized use[.]" (SBr. at 39.) However, in a summary in its initial post-hearing brief, PPC does not suggest that there has been a "pattern of violation" of the '539 patent based on the sale for importation of the infringing Fei Yu 043 connector by Defaulting Respondents. (CBr. at 15.)[57] At issue here is whether a general exclusion order is necessary to prevent circumvention of a limited exclusion order directed toward the '076 patent.

As discussed above, at least three different entities among Defaulting Respondents participated in the sale for importation of the Fei Yu 043 Connectors, and a fourth entity shared the same contact information and advertised similar compression connectors on its website and at trade shows. (Order No. 22 at 6; CX-14; CX-16-19; Tr. at 326:18-335:18.) The overlapping location, personnel, and operations of these entities led Mr. Haube to believe that ZE, Yangzhou ZE and Yangzhou FTC were alter egos or aliases for Fei Yu. (Tr. at 335:11-18.) While the precise relationship among the four Defaulting Respondents is unclear, their demonstrated

[57] PPC has submitted evidence with respect to dozens of compression connector products made or sold by Respondents, Defaulting Respondents and non-respondents, yet has only identified a single product (other than the Digicon Connector made by PPC's licensee), the Fei Yu Model 043, that has any relationship at all to the '539 patent. (CBr. at 15, CFF VIII.104 (table of evidence concerning a pattern of Section 337 violations).)

commonalities are indicative of the ease with which the individual(s) (see Tr. at 326:10-329:16) operating these entities could establish new companies and continue to sell infringing compression connectors for importation if barred by a limited exclusion order.

In addition, as discussed in detail above with respect to remedy for the '194 patent, the testimony of Mr. Noll supports a conclusion that it would be easy for a foreign company making compression connectors to evade a limited exclusion order. (Tr. at 1441-49, 1468:8-1471:7, 1473:14-25.) Other undisputed evidence outlined above shows that infringers would be motivated to circumvent a limited exclusion order, and that market entry barriers are low. (CFF VIII.52-56 (undisputed); CFF VIII.63 (undisputed); CFF VIII.70-74 (undisputed); Tr. at 141:16-20, 143:16-20 (Mezzalingua).) The Administrative Law Judge finds that the evidence supports a recommendation with respect to the '539 patent that a general exclusion order is necessary to prevent circumvention of a limited exclusion order.

E. Remedy with Respect to the '076 Patent.

As discussed above, PPC requests without any specificity as to the asserted patents that a general exclusion order against compression connectors be issued because (i) such an order is necessary to prevent circumvention of a limited exclusion order and (ii) there is a pattern of violation of Section 337 and it is difficult to identify the source of infringing products. (*See* CBr. at 99.) The Administrative Law Judge has already found that the Fei Yu Model 039B infringes the sole claim of the '076 patent. PPC further identifies two products of two non-respondents in the effort to establish a widespread pattern of infringement of the '076 patent. (CBr. at 85.)

Staff argues that only a limited exclusion order should issue against Defaulting Respondents because "[t]he evidence does not show a widespread pattern of unauthorized use—at most three parties have been shown to have infringed the '076 design patent." (SBr. at 39.)

Circumvention of a Limited Exclusion Order.

As discussed above, at least three different entities among Defaulting Respondents participated in the sale for importation of the Fei Yu 039B Connectors, and a fourth entity shared the same contact information and advertised similar compression connectors on its website and at trade shows. (Order No. 22 at 6; CX-14; CX-16-19; Tr. at 326:18-335:18.) The overlapping location, personnel, and operations of these entities led Mr. Haube to believe that ZE, Yangzhou ZE and Yangzhou FTC were alter egos or aliases for Fei Yu. (Tr. at 335:11-18.) While the precise relationship among the four Defaulting Respondents is unclear, their demonstrated commonalities are indicative of the ease with which the individual(s) (see Tr. at 326:10-329:16) operating these entities could establish new companies and continue to sell infringing compression connectors for importation if barred by a limited exclusion order.

In addition, as discussed in detail above with respect to remedy for the '194 patent, the testimony of Mr. Noll supports a conclusion that it would be easy for a foreign company making compression connectors to evade a limited exclusion order. (Tr. at 1441-49, 1468:8-1471:7, 1473:14-25.) Other undisputed evidence outlined above shows that infringers would be motivated to circumvent a limited exclusion order, and that market entry barriers are low. (CFF VIII.52-56 (undisputed); CFF VIII.63 (undisputed); CFF VIII.70-74 (undisputed); Tr. at 141:16-20, 143:16-20 (Mezzalingua).) The Administrative Law Judge finds that the evidence supports a recommendation with respect to the '076 patent that a general exclusion order is necessary to prevent circumvention of a limited exclusion order.

Pattern of Violation of Section 337, Difficult to Identify the Source of Infringing Products.

As discussed above, it is the Initial Determination of the Administrative Law Judge based on substantial, reliable and probative evidence that Defaulting Respondents Fei Yu, Yangzhou

ZE and Yangzhou FTC, acting in concert, sold Fei Yu 039B Connectors for importation in violation of Section 337. While this finding alone is insufficient to establish a pattern of violation, PPC has presented other undisputed evidence to support its request for a general exclusion order.

According to PPC, the Hangzhou Prevail Optoelectronic Equipment Co. Ltd. Model No. ZG050 connector, purchased directly from the company's website in China, infringes the '076 design. (CFF VIII.104 (undisputed in relevant part); CPX-90; CX-280.) In support of its assertion that the Hangzhou Prevail Optoelectronic Equipment Co. Ltd. Model No. ZG050 connector design infringes the '076 patent, PPC has submitted a side by side comparison of one of the figures of the '076 patent and the accused product, with certain physical features labeled (reproduced below). (CBr at 83.) In addition, PPC provides testimony and a comparison chart by an "ordinary observer," Dr. Eldering. (Tr. at 677:5-679:11; CDX-57; CPX-90.)

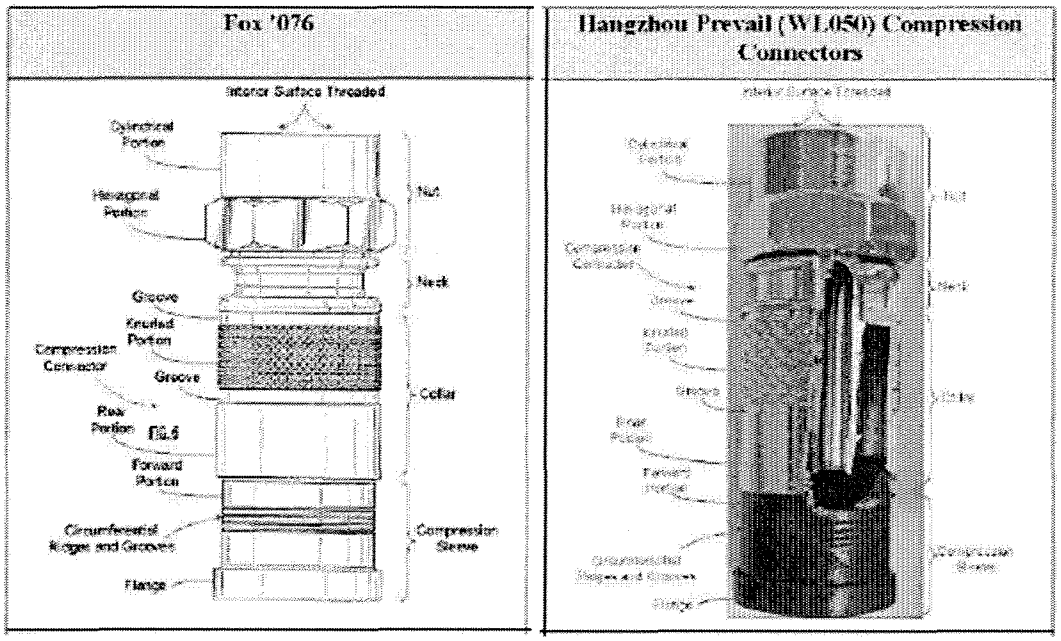

(CBr at 83 (center image omitted).) According to Dr. Eldering, the two designs are substantially similar. (Tr. at 679:5-11.) In his chart, Dr. Eldering identifies the features from his verbal

characterization in the accused Hangzhou Prevail Optoelectronic Equipment Co. Ltd. Model No. ZG050 connector:

> The Hangzhou Prevail (WL050) compression connector has a nut that has a cylindrical portion and a hexagonal portion. The cylindrical portion of the Hangzhou Prevail (WL050) connector nut represents approximately fifty percent of the nut, and is followed by a hexagonal portion. The inside surface of the Hangzhou Prevail (WL050) connector nut is threaded. The Hangzhou Prevail (WL050) connector has a narrow neck behind the hexagonal portion of the nut. The Hangzhou Prevail (WL050) connector has a collar behind the narrow neck. The main body of the Hangzhou Prevail (WL050) connector collar is generally cylindrical, and has a forward knurled portion between two grooves. The rear portion of the Hangzhou Prevail (WL050) connector collar has a smooth surface. The Hangzhou Prevail (WL050) connector has a compression sleeve that has a forward portion of smaller outer diameter than the collar. The forward portion of the compression sleeve is inserted into the end of the collar that is opposite the nut. The Hangzhou Prevail (WL050) connector compression sleeve is cylindrical and has a series of circumferential grooves and ridges on its exterior surface. The rearward portion of the Hangzhou Prevail (WL050) connector compression sleeve has a flange that has an outer diameter approximately equal to the outer diameter of the collar. In the closed position, the Hangzhou Prevail (WL050) connector compression sleeve is inserted into the collar and the grooves and ridges on the exterior surface of the compression sleeve are no longer visible.

(CDX-57.) Dr. Eldering concludes, and Staff agrees, that the Hangzhou Prevail Optoelectronic Equipment Co. Ltd. Model No. ZG050 connector infringes the claim of the '076 design patent. (Tr. at 679:5-11; SBr. at 28.)

In addition, PPC argues that the Ariza Connector infringes the '076 design. (CFF VIII.104 (undisputed in relevant part); CX-257; CPX-68; CPX-111.) As discussed above with respect to the '257 patent, Ariza is a domestic company believed to be importing Fei Yu Model 039B Connectors. (CX-291 at PPC-TRIAL-004845 at line 545.)

In support of its assertion that the Ariza Model No. FY-039-B connector design infringes the '076 patent, PPC has submitted a side by side comparison of one of the figures of the '076 patent and the accused product, with certain physical features labeled (reproduced below). (CBr

at 83.) In addition, PPC provides testimony and a comparison chart by an "ordinary observer," Dr. Eldering. (Tr. at 675:8-677:4; CDX-57; CPX-68.)

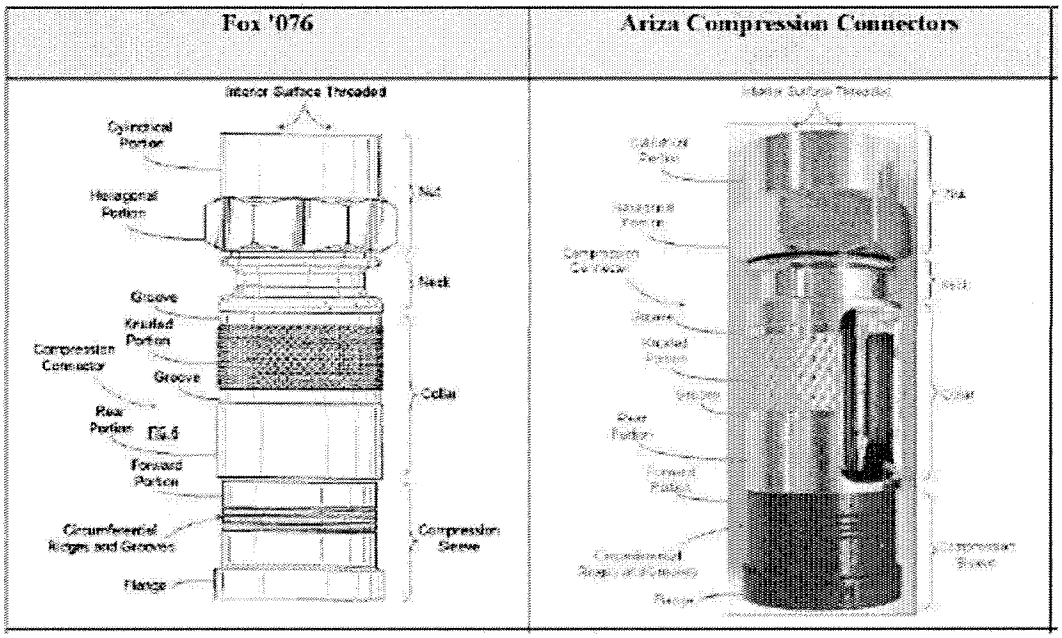

(CBr at 83.) According to Dr. Eldering, the two designs are substantially similar. (Tr. at 676:24.)

In his chart, Dr. Eldering identifies the features from his verbal characterization in the accused Ariza Model No. FY-039-B connector:

> The Ariza compression connector has a nut that has a cylindrical portion and a hexagonal portion. The cylindrical portion of the Ariza connector nut represents approximately fifty percent of the nut, and is followed by a hexagonal portion. The inside surface of the Ariza connector nut is threaded. The Ariza connector has a narrow neck behind the hexagonal portion of the nut. The Ariza connector has a collar behind the narrow neck. The main body of the Ariza connector collar is generally cylindrical, and has a forward knurled portion between two grooves. The rear portion of the Ariza connector collar has a smooth surface. The Ariza connector has a compression sleeve that has a forward portion of smaller outer diameter than the collar. The forward portion of the compression sleeve is inserted into the end of the collar that is opposite the nut. The Ariza connector compression sleeve is cylindrical and has a series of circumferential grooves and ridges on its exterior surface. The rearward portion of the Ariza connector compression sleeve has a flange that has an outer diameter approximately equal to the outer diameter of the collar. In the closed position, the Ariza connector compression sleeve is inserted into the collar and the grooves and ridges on the exterior surface of the compression sleeve are no longer visible.

(CDX-57.) Dr. Eldering concludes, and Staff agrees, that the Ariza Model No. FY-039-B connector infringes the claim of the '076 design patent. (Tr. at 676; SBr. at 28.)

The Administrative Law Judge finds that while PPC has presented evidence that at least two models of connector (the Fei Yu/Ariza 039B and the Hangzhou Prevail Optoelectronic Equipment Co. Ltd. Model No. ZG050) infringe the '076 patent, this is not a sufficient showing for a finding that the violations are widespread. Therefore the Administrative Law Judge does not reach the question of whether it is difficult to identify the source of infringing products. However, as noted above, the Administrative Law Judge finds that the evidence supports a recommendation with respect to the '076 patent that a general exclusion order is necessary to prevent circumvention of a limited exclusion order.

II. CEASE AND DESIST ORDER

Section 337 provides that in addition to, or in lieu of, the issuance of an exclusion order, the Commission may issue a cease and desist order as a remedy for violation of Section 337. *See* 19 U.S.C. § 1337(f)(1). The Commission generally issues a cease and desist order directed to a domestic respondent when there is a "commercially significant" amount of infringing, imported product in the United States that could be sold so as to undercut the remedy provided by an exclusion order. *See Certain Crystalline Cefadroxil Monohydrate*, Inv. No. 337-TA-293, Comm'n Op. on the Issue Under Review, and on Remedy, the Public Interest and Bonding at 37-42, Pub. No. 2391 (U.S.I.T.C., June 1991). Cease and desist orders have been declined when the record contains no evidence concerning infringing inventories in the United States. *Certain Condensers, Parts Thereof and Products Containing Same, Including Air Conditioners for Automobiles*, Inv. No. 337-TA-334, Comm'n Op. at 28 (U.S.I.T.C., Aug. 27, 1997).

In light of the Administrative Law Judge's findings in the Initial Determination above that the only domestic Respondent remaining in the Investigation, Gem Electronics, does not infringe claims 1 and 5 of the '257 patent, a cease and desist order does not need to be issued.

However, the Administrative Law Judge notes that it is undisputed that {

}

(CFF VIII.146-47 (undisputed); SFF 979-1010 (undisputed); Tr. 1604:23-1612:4 (O'Neil).) Specifically, Mr. O'Neil testified that {

}. (Tr. at 1611:21-1612:4.) Therefore, should the Commission determine that a violation has occurred with respect to Gem, the Administrative Law Judge recommends that the Commission issue a cease and desist order.

III. BOND DURING PRESIDENTIAL REVIEW PERIOD

The Administrative Law Judge and the Commission must determine the amount of bond to be required of a respondent, pursuant to Section 337(j)(3), during the 60-day Presidential review period following the issuance of permanent relief, in the event that the Commission determines to issue a remedy. 19 C.F.R. § 210.42(a)(1)(ii). The purpose of the bond is to protect the complainant from any injury. 19 C.F.R § 210.50(a)(3).

When reliable price information is available, the Commission has often set the bond by eliminating the differential between the domestic product and the imported, infringing product. *See Certain Microsphere Adhesives, Process for Making Same, and Products Containing Same, Including Self-Stick Repositionable Notes*, Inv. No. 337-TA-366, Comm'n Op., at 24 (U.S.I.T.C., December 15, 1995). In circumstances where pricing information is unclear, or where variations in pricing make price comparisons complicated and difficult, the Commission typically has set a 100 percent bond. *Id.*, at 24-25; *Certain Digital Multimeters and Products with Multimeter*

Functionality, Inv. No. 337-TA-588, Comm'n Op., at 12-13 (U.S.I.T.C., June 3, 2008) (finding 100 percent bond where each respondent set its price differently, preventing clear differentials between complainant's products and the infringing imports).

PPC argues that bond should be set at 100 percent of the entered value of accused products because Mr. White testified that allegedly infringing connectors sold on the internet are typically { } of PPC's connectors. (CBr. at 119.) Staff argues that no bond should be set because "the record lacks any evidence or attempt to introduce evidence concerning the bond rate." (SBr. at 41; SRBr. at 9-10.) Respondents request that "they be allowed to post an appropriate bond in an appropriate amount" but do not set a figure. (RBr. at 72.)

Mr. White, PPC's Vice President of satellite sales, retail services and structured wiring, testified that foreign connectors sell for { } of PPC's connectors:

> Q. With respect to price, for instance, on the EX product, what would be a typical price that you have seen the compression connectors offered for sale by these competitors?
> {
>
> }

(Tr. at 634:15 -635:1 (White) (emphasis added).) PPC did not present additional evidence to support Mr. White's testimony. However, Mr. White testified that he has experience with PPC's field sales, and was the director of PPC's national accounts before assuming his current position. (*Id.* at 616.) As a result, the Administrative Law Judge disagrees with Staff that Mr. White's rough price estimates should be discounted. The Administrative Law Judge further notes that Respondents do not dispute the facts derived from Mr. White's testimony. (ROCFF IX.6-8.) The Administrative Law Judge recommends that the Commission set a bond that eliminates the

{ } differential between the { } domestic product and the { } imported, infringing product.

IV. CONCLUSION

In accordance with the discussion of the issues contained herein, it is the RECOMMENDED DETERMINATION of the Administrative Law Judge that in the event the Commission finds a violation of Section 337, the Commission should issue a general exclusion order directed to coaxial cable compression connectors that infringe the asserted claims of the '194, '257, '539 and '076 patents. Furthermore, if the Commission imposes a remedy following a finding of violation, respondents should be required to post a bond of 13 cents for each accused coaxial cable compression connector imported during the Presidential review period.

Within seven days of the date of this document, each party shall submit to the office of the Administrative Law Judge a statement as to whether or not it seeks to have any portion of this document deleted from the public version. The parties' submissions must be made by hard copy by the aforementioned date.

Any party seeking to have any portion of this document deleted from the public version thereof must submit to this office a copy of this document with red brackets indicating any portion asserted to contain confidential business information by the aforementioned date. The parties' submission concerning the public version of this document need not be filed with the Commission Secretary.

SO ORDERED.

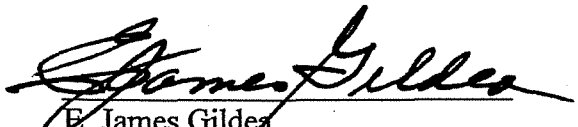

E. James Gildea
Administrative Law Judge

APPENDIX A

EXHIBIT LISTS

UNITED STATES INTERNATIONAL TRADE COMMISSION

Washington, D.C. 20436
Before: The Honorable E. James Gildea
Administrative Law Judge

In the Matter of:	)	
	)	
	)	
CERTAIN COAXIAL	)	Investigation No. 337-TA-650
CABLE CONNECTORS AND	)	
COMPONENTS THEREOF AND	)	
PRODUCTS CONTAINING SAME	)	

COMPLAINANT'S FINAL TRIAL EXHIBIT LIST

Complainant's Trial Ex. #	Exhibit Description	Purpose	Witness(es)	Document Date	Trial Bates #	Cross Reference	Received
CX-1	Verified Complaint as amended	Domestic Industry/ Importation / Infringement/ Validity / Remedy	Self Authenticating	5/16/08	PPC-TRIAL-000001 thru PPC-TRIAL-000040	--	Withdrawn
CX-2	Certified copy of U.S. Patent No. 6,558,194	Domestic Industry/ Infringement/ Validity	Self Authenticating	4/5/06	PPC-TRIAL-000041 thru PPC-TRIAL-000073	Complaint Ex. 1 PPC Sum. Determination Ex. 53 (uncertified)	Received
CX-3	Certified copy of U.S. Patent No. D440,539	Domestic Industry/ Infringement/ Validity	Self Authenticating	4/30/07	PPC-TRIAL-000074 thru PPC-TRIAL-000077	Complaint Ex. 3	Received
CX-4	Certified copy of U.S. Patent No. D519,076	Domestic Industry/ Infringement/	Self Authenticating	11/3/06	PPC-TRIAL-000078 thru PPC-TRIAL-000085	Complaint Ex. 4	Received

COMPLAINANT'S REVISED TRIAL EXHIBIT LIST

Complainant's Trial Ex. #	Exhibit Description	Purpose	Witness(es)	Document Date	Trial Bates #	Cross Reference	Received
		Validity				PPC Sum. Determination Ex. 52 (uncertified)	
CX-5	Certified copy of Assignment of U.S. Patent No. 6,558,194	Domestic Industry/ Infringement/ Validity	Self Authenticating	4/1/08	PPC-TRIAL-000086 thru PPC-TRIAL-000088	Complaint Ex. 5	Withdrawn
CX-6	Certified copy of Assignment of U.S. Patent No. 5,470,257	Domestic Industry/ Infringement/ Validity	Self Authenticating	4/1/08	PPC-TRIAL-000089 thru PPC-TRIAL-000092	Complaint Ex. 6	Withdrawn
CX-7	Certified copy of Assignment of U.S. Patent No. D440,539	Domestic Industry/ Infringement/ Validity	Self Authenticating	5/1/07	PPC-TRIAL-000093 thru PPC-TRIAL-000095	Complaint Ex. 7	Withdrawn
CX-8	Certified copy of Assignment of U.S. Patent No. D519,076	Domestic Industry/ Infringement/ Validity	Self Authenticating	4/1/08	PPC-TRIAL-000096 thru PPC-TRIAL-000098	Complaint Ex. 8	Withdrawn
CX-9	General and historical information about PPC	Domestic Industry	J. Mezzalingua / R. Haube	4/10/08	PPC-TRIAL-000099 thru PPC-TRIAL-000101	Complaint Ex. 9	Withdrawn
CX-10C	Licensees to patents at issue	Domestic Industry	J. Mezzalingua	N/A	PPC-TRIAL-000102	Complaint Ex. 10	Withdrawn
CX-11	Information about PPC's EX Series connectors	Domestic Industry	R. Haube / N. Montena	3/31/08	PPC-TRIAL-000103 thru PPC-TRIAL-000109	Complaint Ex. 11	Received
CX-12	Information about PPC's CMP Series connectors	Domestic Industry	R. Haube / N. Montena	3/31/08	PPC-TRIAL-000110 thru PPC-TRIAL-000115	Complaint Ex. 12	Received
CX-13	Affidavit of Richard Haube concerning 337 violations by Fei Yu	Domestic Industry/ Importation/ Infringement/ Remedy	R. Haube	4/10/08	PPC-TRIAL-000116 thru PPC-TRIAL-000120	Complaint Ex. 13 (with no affidavit exhibits)	Withdrawn
CX-14	Emails, invoice and bank instructions regarding purchase of Fei Yu FY039A and FY039B connectors by Richard Haube	Importation/ Infringement/ Remedy	R. Haube	June 2007	PPC-TRIAL-000121 thru PPC-TRIAL-000124	Complaint Ex. 13, Ex. A	Received
CX-15	Fei Yu "Contact Us" webpage	Importation/ Infringement/ Remedy	R. Haube	1/29/08	PPC-TRIAL-000125 thru PPC-TRIAL-000126	Complaint Ex. 13, Ex. B	Received

COMPLAINANT'S REVISED TRIAL EXHIBIT LIST

Complainant's Trial Ex. #	Exhibit Description	Purpose	Witness(es)	Document Date	Trial Bates #	Cross Reference	Received
CX-16	Wire transfer documents regarding purchase of Fei Yu FY039A and FY039B connectors by Richard Haube	Importation/ Infringement/ Remedy	R. Haube	6/22/07	PPC-TRIAL-000127 thru PPC-TRIAL-000128	Complaint Ex. 13, Ex. C	Received
CX-17	Customs Duty Invoice regarding purchase of Fei Yu FY039A and FY039B connectors by Richard Haube	Importation/ Infringement/ Remedy	R. Haube	8/4/07	PPC-TRIAL-000129	Complaint Ex. 13, Ex. D	Received
CX-18	Emails, invoice and bank instructions regarding purchase of Fei Yu FY037, FY038, FY039, FY040B, FY041, FY043 and FY047 connectors by Richard Haube	Importation/ Infringement/ Remedy	R. Haube	Sept. 2007	PPC-TRIAL-000130 thru PPC-TRIAL-000135	Complaint Ex. 13, Ex. E	Received
CX-19	Emails concerning wire transfer regarding purchase of Fei Yu FY037, FY038, FY039, FY040B, FY041, FY043 and FY047 connectors by Richard Haube	Importation/ Infringement/ Remedy	R. Haube	Sept. and Oct. 2007	PPC-TRIAL-000136 thru PPC-TRIAL-000138	Complaint Ex. 13, Ex. F	Received
CX-20	Affidavit of Stephen Skeels concerning 337 violations by Fu Ching and Gem Electronics	Domestic Industry/ Importation/ Infringement/ Remedy	S. Skeels	4/22/08	PPC-TRIAL-000139 thru PPC-TRIAL-000142	Complaint Ex. 14 (with no affidavit exhibits)	Withdrawn
CX-21	Cease and desist correspondence between PPC and Fu Ching	Importation/ Infringement/ Remedy	S. Skeels	Dec. 2004	PPC-TRIAL-000143 thru PPC-TRIAL-000145	Complaint Ex. 14, Ex. A	Withdrawn
CX-22	Steren Electronics and Gem Electronics PermaSeal product web pages	Importation/ Infringement/ Remedy	S. Skeels	--	PPC-TRIAL-000146 thru PPC-TRIAL-000152	Complaint Ex. 14, Ex. B	Withdrawn
CX-23	Email correspondence between S. Skeels and G. Jiao of Fei Yu regarding FY037 and FY040 products	Importation/ Infringement/ Remedy	S. Skeels	June 2007	PPC-TRIAL-000153 thru PPC-TRIAL-000154	Complaint Ex. 14, Ex. C	Withdrawn
CX-24	Affidavit of Stephen P. Malak concerning 337 violations by Edali and Aska Communication Corp.	Domestic Industry/ Importation/ Infringement/ Remedy	S. Malak	4/22/08	PPC-TRIAL-000155 thru PPC-TRIAL-000159	Complaint Ex. 15 (with no affidavit exhibits)	Withdrawn

COMPLAINANT'S REVISED TRIAL EXHIBIT LIST

Complainant's Trial Ex. #	Exhibit Description	Purpose	Witness(es)	Document Date	Trial Bates #	Cross Reference	Received
CX-25	Pico Macom response to cease and desist letter from PPC	Importation/ Infringement/ Remedy	S. Malak	3/8/04	PPC-TRIAL-000160	Complaint Ex. 15, Ex. A	Withdrawn
CX-26	Cease and desist letter from PPC to Edali Industrial Corp.	Importation/ Infringement/ Remedy	S. Malak	3/15/04	PPC-TRIAL-000161	Complaint Ex. 15, Ex. B	Received
CX-27	PPC cease and desist letter to Skywalker Communications and response from Skywalker	Importation/ Infringement/ Remedy	S. Malak	May and June 2004	PPC-TRIAL-000162 thru PPC-TRIAL-000165	Complaint Ex. 15, Ex. C	Received
CX-28	Emails from Jayco Ventures, Inc. regarding Aska connectors and emails concerning Richard Haube's purchase of Aska connectors	Importation/ Infringement/ Remedy	S. Malak	Nov. 2004	PPC-TRIAL-000166 thru PPC-TRIAL-000168	Complaint Ex. 15, Ex. D	Withdrawn
CX-29	PPC cease and desist letter to Aska Communication Corp. and response from Aska	Importation/ Infringement/ Remedy	S. Malak	Jan. and Feb. 2005	PPC-TRIAL-000169 thru PPC-TRIAL-000170	Complaint Ex. 15, Ex. E	Received
CX-30	Skywalker Communications web pages showing infringing RG6, RG6Quad and RG59 connectors manufactured by Edali	Importation/ Infringement/ Remedy	S. Malak	--	PPC-TRIAL-000171 thru PPC-TRIAL-000172	Complaint Ex. 15, Ex. F	Withdrawn
CX-31	Aska Communication Corp. catalog pages and web pages showing infringing FPL-56 and FPL-56Q connectors manufactured by Edali	Importation/ Infringement/ Remedy	S. Malak	12/17/07	PPC-TRIAL-000173 thru PPC-TRIAL-000175	Complaint Ex. 15, Ex. G	Withdrawn
CX-32	Fei Yu product catalog	Importation/ Infringement/ Remedy	R. Haube / S. Malak	--	PPC-TRIAL-000176 thru PPC-TRIAL-000197	Complaint Ex. 16	Received
CX-33	Pictures and cutaway cross sections of Edali connectors infringing the '194 Patent	Infringement/ Remedy	N. Montena	--	PPC-TRIAL-000198 thru PPC-TRIAL-000204	Complaint Ex. 25	Received
CX-34	Pictures and cutaway cross sections of Fu Ching connectors infringing the '257 Patent	Infringement/ Remedy	N. Montena	--	PPC-TRIAL-000205 thru PPC-TRIAL-000210	Complaint Ex. 36	Withdrawn

COMPLAINANT'S REVISED TRIAL EXHIBIT LIST

Complainant's Trial Ex. #	Exhibit Description	Purpose	Witness(es)	Document Date	Trial Bates #	Cross Reference	Received
CX-35	Pictures and cutaway cross sections of Fei Yu model FY039B connectors in open and closed positions	Infringement/ Remedy	N. Montena	--	PPC-TRIAL-000211 thru PPC-TRIAL-000214	Complaint Ex. 40	Withdrawn
CX-36C	Domestic industry investment and expenditure information on EX Series connectors	Domestic Industry	M. Stys / J. Young	--	PPC-TRIAL-000215	Complaint Ex. 47	Withdrawn
CX-37C	Domestic industry investment and expenditure information on CMP Series connectors	Domestic Industry	M. Stys / J. Young	--	PPC-TRIAL-000216	Complaint Ex. 48	Withdrawn
CX-38C	Summary of domestic industry investment and expenditures for practicing asserted patents in United States	Domestic Industry	M. Stys / J. Young	--	PPC-TRIAL-000217	Complaint Ex. 49	Withdrawn
CX-39C	Pictures from PPC Syracuse facility of EX Series manufacturing operations	Domestic Industry	D. Rahner	--	PPC-TRIAL-000218 thru PPC-TRIAL-000224	Complaint Ex. 50	Withdrawn
CX-40C	Pictures from PPC Syracuse facility of CMP Series manufacturing operations	Domestic Industry	D. Rahner	--	PPC-TRIAL-000225 thru PPC-TRIAL-000232	Complaint Ex. 51	Withdrawn
CX-41	Certified Copy of Prosecution History for U.S. Patent No. 5,558,194	Domestic Industry/ Infringement/ Validity	Self Authenticating	5/17/06	PPC-TRIAL-000233 thru PPC-TRIAL-001075	Complaint Appendix A	Received
CX-42	Certified Copy of Prosecution History for U.S. Patent No. D440,539	Domestic Industry/ Infringement/ Validity	Self Authenticating	5/29/07	PPC-TRIAL-001076 thru PPC-TRIAL-001181	Complaint Appendix C	Received
CX-43	Certified Copy of Prosecution History for U.S. Patent No. D519,076	Domestic Industry/ Infringement/ Validity	Self Authenticating	11/6/06	PPC-TRIAL-001182 thru PPC-TRIAL-001248	Complaint Appendix D	Received
CX-44C	Declaration of John Young, PPC Assistant Controller	Domestic Industry	J. Young	02/26/09	PPC-TRIAL-001249 thru PPC-TRIAL-001255	PPC Sum. Determination Ex. 1 (with no declaration exhibits)	Withdrawn
CX-45C	Worldwide sales history for CMP series connectors	Domestic Industry	J. Young	2004-2009	PPC-TRIAL-001256 thru PPC-TRIAL-001264	PPC Sum. Determination Ex. 1, Ex. A	Withdrawn
CX-46C	Worldwide sales history for EX series	Domestic Industry	J. Young	2004-2009	PPC-TRIAL-001265 thru PPC-TRIAL-001271	PPC Sum. Determination	Withdrawn

COMPLAINANT'S REVISED TRIAL EXHIBIT LIST

Complainant's Trial Ex. #	Exhibit Description	Purpose	Witness(es)	Document Date	Trial Bates #	Cross Reference	Received
	connectors					Ex. 1, Ex. B	
CX-47C	Worldwide production history for CMP series connectors	Domestic Industry	J. Young	2004-2009	PPC-TRIAL-001272	PPC Sum. Determination Ex. 1, Ex. C	Withdrawn
CX-48C	Worldwide production history for EX series connectors	Domestic Industry	J. Young	2004-2009	PPC-TRIAL-001273 thru PPC-TRIAL-001274	PPC Sum. Determination Ex. 1, Ex. D	Withdrawn
CX-49C	PPC financial statement of total investment in property, plant and equipment for Headquarters in Syracuse, NY	Domestic Industry	J. Young	2007-2008	PPC-TRIAL-001275	PPC Sum. Determination Ex. 1, Ex. E	Withdrawn
CX-50C	PPC report on investment in plant and equipment at the East Syracuse facility	Domestic Industry	J. Young	1998 – 2009	PPC-TRIAL-001276 thru PPC-TRIAL-001278	PPC Sum. Determination Ex. 1, Ex. F	Withdrawn
CX-51C	PPC CMP and EX Series connector labor costs for East Syracuse facility	Domestic Industry	J. Young	2007	PPC-TRIAL-001279 thru PPC-TRIAL-001280	PPC Sum. Determination Ex. 1, Ex. G	Withdrawn
CX-52C	PPC spreadsheet detailing royalty income from current and expired licenses issued in connection with the '194 patent	Domestic Industry	J. Young	2004 – 2008	PPC-TRIAL-001281 thru PPC-TRIAL-001285	PPC Sum. Determination Ex. 1, Ex. H	Withdrawn
CX-53C	PPC spreadsheet detailing legal expenditures regarding '257 and '076 patents practiced by CMP series connectors	Domestic Industry	J. Young	2004 – 2008	PPC-TRIAL-001286 thru PPC-TRIAL-001287	PPC Sum. Determination Ex. 1, Ex. I	Withdrawn
CX-54C	Worldwide sales history for accessories	Domestic Industry	J. Young	2004-2009	PPC-TRIAL-001288 thru PPC-TRIAL-001293	PPC Sum. Determination Ex. 1, Ex. J	Withdrawn
CX-55C	Deposition transcript of Lan Chen "Jessie" Hsia of 11/18/2008 (excerpts)	Importation/ Infringement/ Remedy	J. Hsia	11/18/08	PPC-TRIAL-001294 thru PPC-TRIAL-001305	PPC Sum. Determination Ex. 2	Withdrawn
CX-56C	Shipping Documents – Best Link Netware, Inc.	Importation/ Infringement/ Remedy	J. Hsia	July 2006	PPC-TRIAL-001306 thru PPC-TRIAL-001311	PPC Sum. Determination Ex. 3 PPC Deposition Ex. PPC 17	Withdrawn
CX-57C	Fu Ching's Responses and Objections to	Importation/	Self	08/15/08	PPC-TRIAL-001312 thru PPC-TRIAL-001318	PPC Sum. Determination	Withdrawn

COMPLAINANT'S REVISED TRIAL EXHIBIT LIST

Complainant's Trial Ex. #	Exhibit Description	Purpose	Witness(es)	Document Date	Trial Bates #	Cross Reference	Received
	PPC's First Set of Interrogatories (excerpts)	Infringement/ Remedy	Authenticating			Ex. 4	
CX-58C	Fu Ching's Responses and Objections to PPC's Second Set of Interrogatories (redacted excerpts)	Importation/ Infringement/ Remedy	Self Authenticating	11/06/08	PPC-TRIAL-001319 thru PPC-TRIAL-001320	PPC Sum. Determination Ex. 5	Received
CX-59C	Deposition of Lan Chen "Jessie" Hsia of 12/10/2008 (excerpts)	Importation/ Infringement/ Remedy	J. Hsia	12/10/08	PPC-TRIAL-001321 thru PPC-TRIAL-001376	PPC Sum. Determination Ex. 6	Withdrawn
CX-60C	Deposition of Stephen Skeels (excerpts)	Importation/ Infringement/ Remedy	S. Skeels	10/03/08	PPC-TRIAL-001377 thru PPC-TRIAL-001412	PPC Sum. Determination Ex. 8	Received
CX-61C	Sample purchase orders from Fu Ching Tech Ind. Co. customers	Importation/ Infringement/ Remedy	J. Hsia	2007	PPC-TRIAL-001413 thru PPC-TRIAL-001418	PPC Sum. Determination Ex. 9	Withdrawn
CX-62C	Gem Response and Objections to PPC's First Set of Interrogatories (redacted excerpts)	Importation/ Infringement/ Remedy	Self Authenticating	08/07/08	PPC-TRIAL-001419 thru PPC-TRIAL-001423	PPC Sum. Determination Ex. 10	Received
CX-63C	Gem U.S. Customs entry no. U16 4634660-5	Importation/ Infringement/ Remedy	W. O'Neil / W. Pitcher	11/20/08	PPC-TRIAL-001424 thru PPC-TRIAL-001430	PPC Sum. Determination Ex. 11 PPC Deposition Ex. PPC 76	Withdrawn
CX-64C	Deposition of William O'Neil (excerpts)	Importation/ Infringement/ Remedy	W. O'Neil	12/17/08	PPC-TRIAL-001431 thru PPC-TRIAL-001439	PPC Sum. Determination Ex. 12	Received
CX-65C	Deposition of William Pitcher (excerpts)	Importation/ Infringement/ Remedy	W. Pitcher	12/18/08	PPC-TRIAL-001440 thru PPC-TRIAL-001448	PPC Sum. Determination Ex. 13	Withdrawn
CX-66C	Gem Responses and Objections to PPC's First Request for Production of Documents and Things (redacted excerpts)	Importation/ Infringement/ Remedy	Self Authenticating	08/07/08	PPC-TRIAL-001449 thru PPC-TRIAL-001451	PPC Sum. Determination Ex. 14	Received

COMPLAINANT'S REVISED TRIAL EXHIBIT LIST

Complainant's Trial Ex. #	Exhibit Description	Purpose	Witness(es)	Document Date	Trial Bates #	Cross Reference	Received
CX-67C	Gem Supplemental Responses to PPC's First Set of Interrogatories, Nos. 6(a), 23-26 and 28 (redacted excerpts)	Importation/ Infringement/ Remedy	Self Authenticating	01/26/09	PPC-TRIAL-001452 thru PPC-TRIAL-001455	PPC Sum. Determination Ex. 15	Received
CX-68C	Horman and Company invoices to Gem	Importation/ Infringement/ Remedy	W. O'Neil / W. Pitcher	2006 – 2007	PPC-TRIAL-001456 thru PPC-TRIAL-001520	PPC Sum. Determination Ex. 16	Withdrawn
CX-69C	Declaration of Richard Haube, PPC Director of Marketing	Importation/ Infringement/ Remedy	R. Haube	02/26/09	PPC-TRIAL-001521 thru PPC-TRIAL-001530	PPC Sum. Determination Ex. 17 (with no declaration exhibits)	Withdrawn
CX-70	Fei Yu Website pages showing sales of Fei Yu compression style F-Connectors	Importation/ Infringement/ Remedy	R. Haube	02/13/09	PPC-TRIAL-001531 thru PPC-TRIAL-001533	PPC Sum. Determination Ex. 17, Ex. A	Received
CX-71	Misc website pages selling compression connectors that appear to infringe PPC's '257 patent protecting PPC's CMP series connectors or PPC's '194 patent protecting its EX series connectors	Importation/ Infringement/ Remedy	R. Haube	02/13/09	PPC-TRIAL-001534 thru PPC-TRIAL-001554	PPC Sum. Determination Ex. 17, Ex. B	Received
CX-72C	Declaration of David Rahner, PPC Director of Manufacturing Engineering	Domestic Industry	D. Rahner	02/23/09	PPC-TRIAL-001555 thru PPC-TRIAL-001563	PPC Sum. Determination Ex. 18 (with no declaration exhibits)	Withdrawn
CX-73C	PPC material / process flow chart for CMP series connectors	Domestic Industry	D. Rahner	--	PPC-TRIAL-001564	PPC Sum. Determination Ex. 18, Ex. A	Withdrawn
CX-74C	Listing of PPC sourcing of components used at facilities manufacturing CMP series connectors	Domestic Industry	D. Rahner	--	PPC-TRIAL-001565 thru PPC-TRIAL-001566	PPC Sum. Determination Ex. 18, Ex. B	Withdrawn
CX-75C	PPC material / process flow chart for EX series connectors	Domestic Industry	D. Rahner	--	PPC-TRIAL-001567	PPC Sum. Determination Ex. 18, Ex. C	Withdrawn
CX-76C	Spreadsheet showing sourcing of components used at the principal facilities manufacturing EX series connectors	Domestic Industry	D. Rahner	2008	PPC-TRIAL-001568 thru PPC-TRIAL-001572	PPC Sum. Determination Ex. 18, Ex. D	Withdrawn
CX-77C	Calculation allocating production floor	Domestic Industry	D. Rahner	--	PPC-TRIAL-001573	PPC Sum. Determination	Withdrawn

COMPLAINANT'S REVISED TRIAL EXHIBIT LIST

Complainant's Trial Ex. #	Exhibit Description	Purpose	Witness(es)	Document Date	Trial Bates #	Cross Reference	Received
	space at the East Syracuse facility for production of the CMP and EX series connectors					Ex. 18, Ex. E	
CX-78C	Spreadsheet of hours worked by the PPC Manufacturing Engineering Dept at East Syracuse	Domestic Industry	D. Rahner	08/01/08 – 02/11/09	PPC-TRIAL-001574	PPC Sum. Determination Ex. 18, Ex. F	Withdrawn
CX-79C	Active Employee Listing for the Manufacturing Engineering Dept at East Syracuse facility	Domestic Industry	D. Rahner	2008	PPC-TRIAL-001575	PPC Sum. Determination Ex. 18, Ex. G	Withdrawn
CX-80C	Declaration of David Jackson, PPC Vice President of Engineering	Domestic Industry	D. Jackson	02/25/09	PPC-TRIAL-001576 thru PPC-TRIAL-001578	PPC Sum. Determination Ex. 19 (with no declaration exhibits)	Withdrawn
CX-81C	Spreadsheet with breakdown of research and development work costs for CMP and EX series connectors	Domestic Industry	D. Jackson	2004-2008	PPC-TRIAL-001579	PPC Sum. Determination Ex. 19, Ex. A	Withdrawn
CX-82C	Declaration of J. Brian Noll, PPC Manager China Operations	Importation/ Infringement/ Remedy	J. Noll	02/19/09	PPC-TRIAL-001580 thru PPC-TRIAL-001583	PPC Sum. Determination Ex. 20	Withdrawn
CX-83C	Declaration of Andrew White, PPC Vice President of Satellite, Structured Wiring and Retail Sales	Importation/ Infringement/ Remedy	A. White	02/23/09	PPC-TRIAL-001584 thru PPC-TRIAL-001587	PPC Sum. Determination Ex. 21 (with no declaration exhibits)	Withdrawn
CX-84	Misc website pages selling coaxial cable connectors that appear to infringe patents protecting the CMP and EX series connectors	Importation/ Infringement/ Remedy	A. White	02/13/09	PPC-TRIAL-001588 thru PPC-TRIAL-001596	PPC Sum. Determination Ex. 21, Ex. A	Received
CX-85C	Fu Ching Responses to PPC's Second Set of Interrogatories (redacted excerpts)	Importation/ Infringement/ Remedy	Self Authenticating	11/06/08	PPC-TRIAL-001597 thru PPC-TRIAL-001600	PPC Sum. Determination Ex. 22	Received
CX-86C	Supp. Declaration of Stephen Malak, PPC Vice President and Intellectual Property Counsel	Domestic Industry/ Importation/ Infringement/	S. Malak	02/26/09	PPC-TRIAL-001601 thru PPC-TRIAL-001620	PPC Sum. Determination Ex. 40 (with no declaration exhibits)	Withdrawn

COMPLAINANT'S REVISED TRIAL EXHIBIT LIST

Complainant's Trial Ex. #	Exhibit Description	Purpose	Witness(es)	Document Date	Trial Bates #	Cross Reference	Received
		Remedy/ Validity					
CX-87	Western District of Wisconsin Opinion and Order granting preliminary injunction, and Order granting PPC's Motion to Modify Preliminary Injunction	Infringement/ Remedy	S. Malak	07/23/03 12/08/03	PPC-TRIAL-001621 thru PPC-TRIAL-001640	PPC Sum. Determination Ex. 40, Ex. A	Withdrawn
CX-88	Reported Decision: *John Mezzalingua Assocs. d/b/a PPC Inc. v. Arris Int'l., 2003 U.S. Dist. LEXIS 4730* (D. Wis. Nov. 14, 2003)	Infringement/ Remedy	S. Malak	11/14/03	PPC-TRIAL-001641 thru PPC-TRIAL-001652	PPC Sum. Determination Ex. 40, Ex. B	Withdrawn
CX-89C	*John Mezzalingua Assocs. d/b/a PPC Inc. v. Arris Int'l*, Trial Transcript Testimony of Robert Pucinni and Randall Holliday (excerpts)	Infringement/ Remedy	S. Malak	12/02/03	PPC-TRIAL-001653 thru PPC-TRIAL-001668	PPC Sum. Determination Ex. 40, Ex. C	Withdrawn
CX-90C	Collection of cease and desist letters sent by PPC	Importation/ Infringement/ Remedy	S. Malak	2001-2006	PPC-TRIAL-001669 thru PPC-TRIAL-001722	PPC Sum. Determination Ex. 40, Ex. D	Received
CX-91	Declaration of Dale McElroy, PPC Applications Engineer	Infringement/ Remedy	D. McElroy	02/27/09	PPC-TRIAL-001723 thru PPC-TRIAL-001726	PPC Sum. Determination Ex. 41 PPC Sum. Determination Response Ex. 15	Withdrawn
CX-92	Declaration / Expert Report of Charles A. Eldering	Domestic Industry/ Infringement/ Remedy	C. Eldering	03/01/09	PPC-TRIAL-001727 thru PPC-TRIAL-001745	PPC Sum. Determination Ex. 42 (with no declaration exhibits) PPC Sum. Determination Response Ex. 16 (with no declaration exhibits)	Withdrawn
CX-93	Curriculum Vitae of Dr. Charles A. Eldering	Domestic Industry/ Infringement/ Remedy	C. Eldering	--	PPC-TRIAL-001746 thru PPC-TRIAL-001753	PPC Sum. Determination Ex. 42, Ex. A	Withdrawn

COMPLAINANT'S REVISED TRIAL EXHIBIT LIST

Complainant's Trial Ex. #	Exhibit Description	Purpose	Witness(es)	Document Date	Trial Bates #	Cross Reference	Received
CX-94	Listing of materials considered by Charles Eldering in forming opinions	Domestic Industry/ Infringement/ Remedy	C. Eldering	--	PPC-TRIAL-001754 thru PPC-TRIAL-001765	PPC Sum. Determination Ex. 42, Ex. B	Withdrawn
CX-95C	Gem and Fu Ching Identification of Expert Witness	Infringement/ Validity	Self Authenticating	11/12/08	PPC-TRIAL-001766 thru PPC-TRIAL-001769	PPC Sum. Determination Ex. 46	Withdrawn
CX-96	Jury Instructions / Claim Construction (excerpts) – *PPC v. Arris* (W.D. Wis.)	Infringement	Self Authenticating	12/09/03	PPC-TRIAL-001770 thru PPC-TRIAL-001779	PPC Sum. Determination Ex. 47	Withdrawn
CX-97	Reexamination of U.S. Patent 6,530,807, January 8, 2009 Action Closing Prosecution (excerpts)	Infringement	Self Authenticating	01/08/09	PPC-TRIAL-001780 thru PPC-TRIAL-001797	PPC Sum. Determination Ex. 49 PPC Sum. Determination Response Ex. 8	Withdrawn
CX-98	Gem Cable Assembly Instructions	Infringement/ Remedy	J. Hsia / W. O'Neil / W. Pitcher	--	PPC-TRIAL-001798	PPC Sum. Determination Ex. 50 PPC Deposition Ex. PPC 14 PPC Sum. Determination Response Ex. 9	Withdrawn
CX-99	U.S. Patent No. 5,470,257 – Prosecution History (excerpts)	Infringement/ Validity	Self Authenticating	1994-1995	PPC-TRIAL-001799 thru PPC-TRIAL-001832	PPC Sum. Determination Ex. 51 PPC Sum. Determination Response Ex. 2	Withdrawn
CX-100C	Fu Ching product design drawings	Infringement/ Remedy	J. Hsia	--	PPC-TRIAL-001833 thru PPC-TRIAL-001835	PPC Sum. Determination Ex. 59 PPC Deposition Ex. 25-27	Withdrawn
CX-101C	Deposition of Stephen Malak (excerpts)	Infringement/	S. Malak	10/02/08	PPC-TRIAL-001836 thru PPC-TRIAL-001850	PPC Sum. Determination	Withdrawn

COMPLAINANT'S REVISED TRIAL EXHIBIT LIST

Complainant's Trial Ex. #	Exhibit Description	Purpose	Witness(es)	Document Date	Trial Bates #	Cross Reference	Received
		Remedy				Response Ex. 10	
CX-102C	Deposition of Stephen Skeels (excerpts)	Infringement/ Remedy	S. Skeels	10/03/08	PPC-TRIAL-001851 thru PPC-TRIAL-001874	PPC Sum. Determination Response Ex. 11	Received
CX-103C	Deposition of Lan Chen "Jessie" Hsia (excerpts)	Importation/ Infringement/ Remedy	J. Hsia	12/10/08	PPC-TRIAL-001875 thru PPC-TRIAL-001893	PPC Sum. Determination Response Ex. 12	Withdrawn
CX-104C	Deposition of William O'Neil (excerpts)	Importation/ Infringement/ Remedy	W. O'Neil	12/17/08	PPC-TRIAL-001894 thru PPC-TRIAL-001902	PPC Sum. Determination Response Ex. 13	Withdrawn
CX-105C	Deposition of William Pitcher (excerpts)	Importation/ Infringement/ Remedy	W. Pitcher	12/18/08	PPC-TRIAL-001903 thru PPC-TRIAL-001907	PPC Sum. Determination Response Ex. 14	Withdrawn
CX-106	Supplemental Declaration of Richard Haube, PPC Director of Marketing	Importation/ Infringement/ Remedy	R. Haube	03/11/09	PPC-TRIAL-001908 thru PPC-TRIAL-001910	PPC Sum. Determination Response Ex. 18 (with no declaration exhibits)	Withdrawn
CX-107	Gem's invoice for 5 packages of 100 connectors labeled 0406-6CS F Plug, Compression Seal RG6, Qty 100	Importation/ Infringement/ Remedy	R. Haube	10/09/08	PPC-TRIAL-001911	PPC Sum. Determination Response Ex. 18, Ex. A	Received
CX-108	Photograph of sealed bag of Gem connectors, model 0406-6CS F Plug, Compression Seal RG6, Qty 100	Importation/ Infringement/ Remedy	R. Haube	--	PPC-TRIAL-001912	PPC Sum. Determination Response Ex. 18, Ex. B PPC Deposition Exhibit 38	Withdrawn
CX-109	Correspondence between counsel for Fu Ching and Counsel for PPC	Importation/ Infringement/ Remedy	J. Hsia	June / July 2004	PPC-TRIAL-001913 thru PPC-TRIAL-001916	PPC Sum. Determination Response Ex. 19	Withdrawn
CX-110	Photos - Fu Ching / Gem production of samples in discovery	Infringement/ Remedy	C. Eldering	--	PPC-TRIAL-001917 thru PPC-TRIAL-001923	PPC Sum. Determination Response Ex. 27	Withdrawn
CX-111	Plaintiff's Memorandum in Opposition to Defendant's Motion for Summary Judgment and for Sanctions, *PPC v.*	Infringement	Self Authenticating	11/07/01	PPC-TRIAL-001924 thru PPC-TRIAL-001944	PPC Sum. Determination Response Ex. 29	Withdrawn

COMPLAINANT'S REVISED TRIAL EXHIBIT LIST

Complainant's Trial Ex. #	Exhibit Description	Purpose	Witness(es)	Document Date	Trial Bates #	Cross Reference	Received
	Thomas & Betts Corp. (S.D. Fla.)						
CX-112	DVD containing video excerpts of the deposition of Stephen Malak	Infringement/ Remedy	S. Malak	10/02/08	N/A	PPC Sum. Determination Response Ex. 30	Withdrawn
CX-113	DVD containing video excerpts of the deposition of Stephen Skeels	Infringement/ Remedy	S. Skeels	10/03/08	N/A	PPC Sum. Determination Response Ex. 31	Received
CX-114C	Deposition transcript of Lan Chen "Jessie" Hsia, dated 11/18/2008 (excerpts)	Importation/ Infringement/ Remedy	J. Hsia	11/18/08	PPC-TRIAL-001945 thru PPC-TRIAL-002094	--	Received
CX-115C	Deposition transcript of Lan Chen "Jessie" Hsia, dated 12/10/2008 (excerpts)	Importation/ Infringement/ Remedy	J. Hsia	12/10/08	PPC-TRIAL-002095 thru PPC-TRIAL-002169	--	Received
CX-116C	Deposition transcript of Lan Chen "Jessie" Hsia, dated 12/11/2008 (excerpts)	Importation/ Infringement/ Remedy	J. Hsia	12/11/08	PPC-TRIAL-002170 thru PPC-TRIAL-002256	--	Received
CX-117C	Deposition transcript of Lan Chen "Jessie" Hsia, dated 12/12/2008 (excerpts)	Importation/ Infringement/ Remedy	J. Hsia	12/12/08	PPC-TRIAL-002257 thru PPC-TRIAL-002296	--	Received
CX-118C	Deposition transcript of Yu Chao "Yvonne" Hsia, dated 12/10/2008 (excerpts)	Importation/ Infringement/ Remedy	Y. Hsia	12/10/08	PPC-TRIAL-002297 thru PPC-TRIAL-002322	--	Received
CX-119C	Deposition transcript of William O'Neil, dated 12/17/2008 (excerpts)	Importation/ Infringement/ Remedy	W. O'Neil	12/17/08	PPC-TRIAL-002323 thru PPC-TRIAL-002393	--	Received
CX-120C	Deposition transcript of William Pitcher, dated 12/18/2008	Importation/ Infringement/ Remedy	W. Pitcher	12/18/08	PPC-TRIAL-002394 thru PPC-TRIAL-002444	--	Withdrawn
CX-121	Sample list of Fu Ching compression connectors	Infringement/ Remedy	J. Hsia	--	PPC-TRIAL-002445 thru PPC-TRIAL-002448	PPC Deposition Ex. PPC 10	Withdrawn
CX-122	Photocopy of a caliper	Infringement/ Remedy	J. Hsia	--	PPC-TRIAL-002449	PPC Deposition Ex. PPC 13	Withdrawn
CX-123	Gem F connector able assembly	Infringement/	J. Hsia / W.	--	PPC-TRIAL-002450	PPC Deposition Ex. PPC	Received

COMPLAINANT'S REVISED TRIAL EXHIBIT LIST

Complainant's Trial Ex. #	Exhibit Description	Purpose	Witness(es)	Document Date	Trial Bates #	Cross Reference	Received
	instructions	Remedy	Pitcher / W. O'Neil			14	
CX-124C	Various Fu Ching connector design drawings	Infringement/ Remedy	J. Hsia	--	PPC-TRIAL-002451 thru PPC-TRIAL-002487	PPC Deposition Ex. PPC 15	Withdrawn
CX-125C	Fu Ching packing list to Horman Co.	Importation/ Infringement/ Remedy	J. Hsia	05/06/05	PPC-TRIAL-002488	PPC Deposition Ex. PPC 16	Withdrawn
CX-126C	Purchase order to Fu Ching from Euro Power International	Importation/ Infringement/ Remedy	J. Hsia	07/12/06	PPC-TRIAL-002489 thru PPC-TRIAL-002494	PPC Deposition Ex. PPC 17	Withdrawn
CX-127C	Fu Ching design drawing (compression connector component)	Infringement/ Remedy	J. Hsia	--	PPC-TRIAL-002495	PPC Deposition Ex. PPC 18	Received
CX-128C	Fu Ching design drawing (compression connector component), FC-710-5	Infringement/ Remedy	J. Hsia	--	PPC-TRIAL-002496	PPC Deposition Ex. PPC 19	Received
CX-129C	Design drawing for outer tube component for BNC connector, FC-BMB-710A1-7	Infringement/ Remedy	J. Hsia	--	PPC-TRIAL-002497	PPC Deposition Ex. PPC 20	Withdrawn
CX-130C	Design drawing (plastic component), FC 710A2-5	Infringement/ Remedy	J. Hsia	--	PPC-TRIAL-002498	PPC Deposition Ex. PPC 21	Withdrawn
CX-131C	Letter from Fu Ching counsel to ITC attaching Confidential Exhibit 1 to Response of Fu Ching to PPC Complaint	Importation/ Infringement/ Remedy	J. Hsia	08/07/08	PPC-TRIAL-002499 thru PPC-TRIAL-002503	PPC Deposition Ex. PPC 22	Withdrawn
CX-132	Material Safety Data Sheet (13 pages)	Infringement/ Remedy	J. Hsia	06/04/03	PPC-TRIAL-002504 thru PPC-TRIAL-002516	PPC Deposition Ex. PPC 23	Received
CX-133C	Fu Ching design drawing for plastic sleeve (FC-BM-710D2-4)	Infringement/ Remedy	J. Hsia	--	PPC-TRIAL-002517	PPC Deposition Ex. PPC 25	Withdrawn
CX-134C	Fu Ching design drawing for plastic sleeve (FC-604B1)	Infringement/ Remedy	J. Hsia	--	PPC-TRIAL-002518	PPC Deposition Ex. PPC 26	Withdrawn
CX-135C	Fu Ching design drawing for plastic sleeve (710 series connectors)	Infringement/ Remedy	J. Hsia	--	PPC-TRIAL-002519	PPC Deposition Ex. PPC 27	Withdrawn
CX-136C	Fu Ching FM1-710 series drawings and website pages showing FM1 series	Infringement/ Remedy	J. Hsia	12/10/08	PPC-TRIAL-002520 thru PPC-TRIAL-002522	PPC Deposition Ex. PPC 29	Received

COMPLAINANT'S REVISED TRIAL EXHIBIT LIST

Complainant's Trial Ex. #	Exhibit Description	Purpose	Witness(es)	Document Date	Trial Bates #	Cross Reference	Received
	connectors						
CX-137	Fu Ching website pages showing cable assembly instructions	Infringement/ Remedy	J. Hsia	12/10/08	PPC-TRIAL-002523 thru PPC-TRIAL-002524	PPC Deposition Ex. PPC 30	Withdrawn
CX-138	Fu Ching website pages showing crimping tool instructions	Infringement/ Remedy	J. Hsia	12/10/08	PPC-TRIAL-002525	PPC Deposition Ex. PPC 31	Withdrawn
CX-139C	Letter from Sherwin Yoder to Patrick Gill/Brian Burke enclosing Fu Ching Revised Supplemental Response to PPC's Interrogatory No. 38	Importation/ Infringement/ Remedy	Self Authenticating	11/14/08	PPC-TRIAL-002526 thru PPC-TRIAL-002535	PPC Deposition Ex. PPC 32	Withdrawn
CX-140	Gem catalog pages of cables and connectors (excerpts)	Infringement/ Remedy	W. O'Neil / W. Pitcher	--	PPC-TRIAL-002536 thru PPC-TRIAL-002540	PPC Deposition Ex. PPC 33	Received
CX-141C	Waterproof and thermal shock test report for F-connectors	Infringement/ Remedy	J. Hsia	--	PPC-TRIAL-002541 thru PPC-TRIAL-002551	PPC Deposition Ex. PPC 34	Withdrawn
CX-142C	Email from Andy Fu of Horman to Bill O'Neil of Gem re PPC Patent Issue	Importation/ Infringement/ Remedy	W. O'Neil	10/20/04	PPC-TRIAL-002552	PPC Deposition Ex. PPC 35	Withdrawn
CX-143	Notice of Deposition of Yu Chao Hsia of Fu Ching	Importation/ Infringement/ Remedy	Self Authenticating	11/14/08	PPC-TRIAL-002553 thru PPC-TRIAL-002558	PPC Deposition Ex. PPC 36	Withdrawn
CX-144C	Spreadsheet titled U.S. Address showing Best Link sales information	Importation/ Infringement/ Remedy	J. Hsia	2006-2007	PPC-TRIAL-002559	PPC Deposition Ex. PPC 37	Withdrawn
CX-145	Photograph of a cross section epoxy of a Gem/Fu Ching connector model FM1-710B1	Infringement/ Remedy	C. Eldering	--	PPC-TRIAL-002560	PPC Deposition Ex. PPC 41	Withdrawn
CX-146C	Drawings of Fu Ching model FM1-710B1 connector	Infringement/ Remedy	J. Hsia	--	PPC-TRIAL-002561 thru PPC-TRIAL-002566	PPC Deposition Ex. PPC 42	Withdrawn
CX-147	Photograph of a cross section epoxy of a Gem/Fu Ching connector model FM1-710B1 (black and white photograph of PPC Exhibit 41)	Infringement/ Remedy	C. Eldering	--	PPC-TRIAL-002567	PPC Deposition Ex. PPC 43	Withdrawn

COMPLAINANT'S REVISED TRIAL EXHIBIT LIST

Complainant's Trial Ex. #	Exhibit Description	Purpose	Witness(es)	Document Date	Trial Bates #	Cross Reference	Received
CX-148C	Various connector drawings	Infringement/ Remedy	J. Hsia	--	PPC-TRIAL-002568 thru PPC-TRIAL-002573	PPC Deposition Ex. PPC 44	Withdrawn
CX-149C	Design drawings of Fu Ching FC-802	Infringement/ Remedy	J. Hsia	--	PPC-TRIAL-002574 thru PPC-TRIAL-002576	PPC Deposition Ex. PPC 45	Withdrawn
CX-150	U.S. Patent No. 6,241,553	Infringement/ Remedy	J. Hsia	06/05/01	PPC-TRIAL-002577 thru PPC-TRIAL-002584	PPC Deposition Ex. PPC 46	Received
CX-151C	Email regarding cease and desist letter from PPC	Importation/ Infringement/ Remedy	J. Hsia	--	PPC-TRIAL-002585	PPC Deposition Ex. PPC 47	Withdrawn
CX-152C	Email to Les Shuts re waterproof connectors and patent infringement and response	Importation/ Infringement/ Remedy	J. Hsia	12/16/03	PPC-TRIAL-002586	PPC Deposition Ex. PPC 48	Withdrawn
CX-153	Letter from Jim Muldoon to James Hong re infringement	Importation/ Infringement/ Remedy	S. Malak	07/16/04	PPC-TRIAL-002587 thru PPC-TRIAL-002588	PPC Deposition Ex. PPC 51	Received
CX-154C	Emails from Any Fu of Horman to Bill O'Neil of Gem re new F connector and cost	Importation/ Infringement/ Remedy	W. O'Neil	03/18/04 04/13/04	PPC-TRIAL-002589 thru PPC-TRIAL-002590	PPC Deposition Ex. PPC 52	Withdrawn
CX-155C	Email from Andy Fu of Horman to Bill O'Neil of Gem re re-drawing on colored plastic; chart of differences between Gem and PPC connector; and, PPC '257 Patent	Importation/ Infringement/ Remedy	W. O'Neil	09/30/04	PPC-TRIAL-002591	PPC Deposition Ex. PPC 53	Withdrawn
CX-156C	Email from Andy Fu of Horman to Bill O'Neil of Gem re PPC Patent Issue – Fax Received	Importation/ Infringement/ Remedy	W. O'Neil	09/10/04	PPC-TRIAL-002592	PPC Deposition Ex. PPC 54	Withdrawn
CX-157C	Infringement Study of U.S. Patent No. 5,470,257	Importation/ Infringement/ Remedy	J. Hsia	11/17/04	PPC-TRIAL-002593 thru PPC-TRIAL-002616	PPC Deposition Ex. PPC 55	Withdrawn
CX-158C	Email from Andy Fu to Bill O'Neil re PPC Patent Issues	Importation/ Infringement/ Remedy	W. O'Neil	11/03/04	PPC-TRIAL-002617	PPC Deposition Ex. PPC 56	Withdrawn

COMPLAINANT'S REVISED TRIAL EXHIBIT LIST

Complainant's Trial Ex. #	Exhibit Description	Purpose	Witness(es)	Document Date	Trial Bates #	Cross Reference	Received
CX-159	Exhibit 1 thru 9 of Fu Ching's Response to PPC's Complaint	Importation/ Infringement/ Remedy	Self Authenticating	--	PPC-TRIAL-002618 thru PPC-TRIAL-002689	PPC Deposition Ex. PPC 57	Withdrawn
CX-160	Fu Ching's Response to PPC's Complaint	Importation/ Infringement/ Remedy	Self Authenticating	08/07/08	PPC-TRIAL-002690 thru PPC-TRIAL-002759	PPC Deposition Ex. PPC 58	Withdrawn
CX-161C	Design drawing – FM1 series connector	Infringement/ Remedy	J. Hsia	--	PPC-TRIAL-002760	PPC Deposition Ex. PPC 59	Withdrawn
CX-162	Cable Assembly Instructions re BNC connector compression seal procedure for RG59 and 6 Type cables	Infringement/ Remedy	J. Hsia	--	PPC-TRIAL-002761 thru PPC-TRIAL-002763	PPC Deposition Ex. PPC 60	Received
CX-163	U.S. Customs regulations	Importation/ Infringement/ Remedy	Self Authenticating	10/01/07	PPC-TRIAL-002764 thru PPC-TRIAL-002773	PPC Deposition Ex. PPC 62	Withdrawn
CX-164C	Gem Statement of Income and Expense	Importation/ Infringement/ Remedy	W. O'Neil / W. Pitcher	2006-2007	PPC-TRIAL-002774 thru PPC-TRIAL-002775	PPC Deposition Ex. PPC 63	Withdrawn
CX-165C	Email from Andy Fu of Horman to Bill O'Neil of Gem re letter for PPC lawyer	Importation/ Infringement/ Remedy	W. O'Neil	06/10/04	PPC-TRIAL-002776	PPC Deposition Ex. PPC 64	Withdrawn
CX-166C	Email from Andy Fu of Horman to Bill O'Neil of Gem re PPC patent issue	Importation/ Infringement/ Remedy	W. O'Neil	01/20/05	PPC-TRIAL-002777	PPC Deposition Ex. PPC 65	Withdrawn
CX-167C	Email from Andy Fu of Horman to Bill Pitcher of Gem re another copy of our products	Importation/ Infringement/ Remedy	W. Pitcher	02/14/05	PPC-TRIAL-002778	PPC Deposition Ex. PPC 66	Withdrawn
CX-168C	Email from Andy Fu of Horman to Bill O'Neil of Gem re waterproof connectors and PPC patent issues	Importation/ Infringement/ Remedy	W. O'Neil	05/20/04	PPC-TRIAL-002779	PPC Deposition Ex. PPC 67	Withdrawn
CX-169C	Email from Bill O'Neil of Gem to Andy Fu of Horman and Bill Pitcher of Gem re	Importation/ Infringement/	W. O'Neil / W. Pitcher	09/16/06	PPC-TRIAL-002780	PPC Deposition Ex. PPC 68	Withdrawn

COMPLAINANT'S REVISED TRIAL EXHIBIT LIST

Complainant's Trial Ex. #	Exhibit Description	Purpose	Witness(es)	Document Date	Trial Bates #	Cross Reference	Received
	latest update to brass price increases	Remedy					
CX-170C	Email from Andy Fu of Horman to Bill O'Neil of Gem re large volume quote	Importation/ Infringement/ Remedy	W. O'Neil	11/08/04	PPC-TRIAL-002781	PPC Deposition Ex. PPC 69	Received
CX-171C	Email from Andy Fu of Horman to Bill O'Neil and Bill Pitcher of Gem re PPC patent issues	Importation/ Infringement/ Remedy	W. O'Neil / W. Pitcher	09/09/04	PPC-TRIAL-002782	PPC Deposition Ex. PPC 70	Withdrawn
CX-172C	Email from Andy Fu of Horman to Bill O'Neil and Bill Pitcher of Gem re PPC patent issues	Importation/ Infringement/ Remedy	W. O'Neil / W. Pitcher	09/10/04	PPC-TRIAL-002783	PPC Deposition Ex. PPC 71	Withdrawn
CX-173C	Email from Andy Fu of Horman to Bill O'Neil and Bill Pitcher of Gem re infringement	Importation/ Infringement/ Remedy	W. O'Neil / W. Pitcher	10/07/04	PPC-TRIAL-002784	PPC Deposition Ex. PPC 72	Withdrawn
CX-174C	Email from Andy Fu of Horman to Bill O'Neil of Gem re new PO# 50534	Importation/ Infringement/ Remedy	W. O'Neil	05/20/04	PPC-TRIAL-002785	PPC Deposition Ex. PPC 73	Received
CX-175C	Email from Andy Fu of Horman to Bill O'Neil of Gem re quantity of latest order	Importation/ Infringement/ Remedy	W. O'Neil	05/20/04	PPC-TRIAL-002786	PPC Deposition Ex. PPC 74	Received
CX-176C	List of manufacturers in Taiwan and China that Gem purchases from	Importation/ Infringement/ Remedy	W. O'Neil / W. Pitcher	--	PPC-TRIAL-002787	PPC Deposition Ex. PPC 75	Withdrawn
CX-177	U.S. Customs – Entry Summary document	Importation/ Infringement/ Remedy	W. O'Neil / W. Pitcher	11/20/08	PPC-TRIAL-002788 thru PPC-TRIAL-002794	PPC Deposition Ex. PPC 76	Withdrawn
CX-178	Customs Bond	Importation/ Infringement/ Remedy	W. O'Neil / W. Pitcher	08/29/00	PPC-TRIAL-002795	PPC Deposition Ex. PPC 77	Withdrawn
CX-179C	Letter from Gem counsel to ITC attaching Confidential Exhibit 1 to Gem Response to Complaint and Notice of Investigation	Importation/ Infringement/ Remedy	W. O'Neil / W. Pitcher	07/03/08	PPC-TRIAL-002796 thru PPC-TRIAL-002799	PPC Deposition Ex. PPC 78	Rejected

COMPLAINANT'S REVISED TRIAL EXHIBIT LIST

Complainant's Trial Ex. #	Exhibit Description	Purpose	Witness(es)	Document Date	Trial Bates #	Cross Reference	Received
CX-180	Gem Electronics catalog	Importation/ Infringement/ Remedy	W. O'Neil / W. Pitcher	2008	PPC-TRIAL-002800 thru PPC-TRIAL-002884	PPC Deposition Ex. PPC 79	Received
CX-181C	Information from Gem Response to Interrogatory Nos. 6, 7 and 8	Importation/ Infringement/ Remedy	W. O'Neil / W. Pitcher	--	PPC-TRIAL-002885 thru PPC-TRIAL-002886	PPC Deposition Ex. PPC 80	Withdrawn
CX-182C	Gem proposal to Diebold	Importation/ Infringement/ Remedy	W. O'Neil / W. Pitcher	07/31/08	PPC-TRIAL-002887 thru PPC-TRIAL-002898	PPC Deposition Ex. PPC 81	Withdrawn
CX-183C	Fu Ching's Responses and Objections to PPC's First Set of Interrogatories (redacted excerpts)	Importation/ Infringement/ Remedy	Admission	08/15/08	PPC-TRIAL-002899 thru PPC-TRIAL-002937	PPC Deposition Ex. PPC 12	Received
CX-184C	Fu Ching's Supplemental Responses and Objections to PPC's First Set of Interrogatories, Nos. 23-26 and 28 (includes Ex. A and Ex. B)	Importation/ Infringement/ Remedy	Admission	01/26/09	PPC-TRIAL-002938 thru PPC-TRIAL-002981	PPC Sum. Determination Ex. 44 (without Ex. A and Ex. B)	Withdrawn
CX-185C	Fu Ching's Second Supplemental Response to PPC's First Set of Interrogatories, No. 23	Importation/ Infringement/ Remedy	Admission	04/29/09	PPC-TRIAL-002982 thru PPC-TRIAL-002988	--	Withdrawn
CX-186C	Fu Ching's Responses and Objections to PPC's Second Set of Interrogatories (redacted excerpts)	Importation/ Infringement/ Remedy	Admission	11/06/08	PPC-TRIAL-002889 thru PPC-TRIAL-003006	--	Received
CX-187C	Fu Ching's Supplemental Responses and Objections to PPC's Second Set of Interrogatories	Importation/ Infringement/ Remedy	Admission	11/13/08	PPC-TRIAL-003007 thru PPC-TRIAL-003026	PPC Deposition Ex. PPC 24	Received
CX-188C	Fu Ching's Responses and Objections to PPC's Third Set of Interrogatories (redacted)	Importation/ Infringement/ Remedy	Admission	11/21/08	PPC-TRIAL-003027 thru PPC-TRIAL-003031	--	Received
CX-189C	Fu Ching's Responses and Objections to PPC's Fourth Set of Interrogatories	Importation/ Infringement/ Remedy	Admission	03/23/09	PPC-TRIAL-003032 thru PPC-TRIAL-003043	--	Withdrawn

COMPLAINANT'S REVISED TRIAL EXHIBIT LIST

Complainant's Trial Ex. #	Exhibit Description	Purpose	Witness(es)	Document Date	Trial Bates #	Cross Reference	Received
CX-190C	Fu Ching's Revised Supplemental Response to PPC's Interrogatory No. 38	Importation/ Infringement/ Remedy	Admission	11/14/08	PPC-TRIAL-003044 thru PPC-TRIAL-003053	PPC Sum. Determination Ex. 7	Received
CX-191C	Gem's Responses and Objections to PPC's First Set of Interrogatories (redacted excerpts)	Importation/ Infringement/ Remedy	Admission	08/07/08	PPC-TRIAL-003054 thru PPC-TRIAL-003088	--	Received
CX-192C	Gem's Supplemental Responses and Objections to PPC's First Set of Interrogatories, Nos. 6(a) 23-26 and 28 (redacted excerpts)	Importation/ Infringement/ Remedy	Admission	01/26/09	PPC-TRIAL-003089 thru PPC-TRIAL-003134	--	Received
CX-193C	Gem's Second Supplemental Response to PPC's First Set of Interrogatories, No. 23 (redacted excerpts)	Importation/ Infringement/ Remedy	Admission	04/29/09	PPC-TRIAL-003135 thru PPC-TRIAL-003141	--	Received
CX-194C	Gem's Responses and Objections to PPC's Second Set of Interrogatories (redacted excerpts)	Importation/ Infringement/ Remedy	Admission	10/10/08	PPC-TRIAL-003142 thru PPC-TRIAL-003151	--	Received
CX-195C	Exhibit A to Gem's Responses and Objections to PPC's Second Set of Interrogatories (list of ten largest customers)	Importation/ Infringement/ Remedy	Admission	2007	PPC-TRIAL-003152 thru PPC-TRIAL-003164	--	Received
CX-196C	Exhibit B to Gem's Responses and Objections to PPC's Second Set of Interrogatories (list of ten largest customers)	Importation/ Infringement/ Remedy	Admission	2008	PPC-TRIAL-003165 thru PPC-TRIAL-003176	--	Received
CX-197C	Gem Responses and Objections to PPC's Third Set of Interrogatories (redacted excerpts)	Importation/ Infringement/ Remedy	Admission	11/03/08	PPC-TRIAL-003177 thru PPC-TRIAL-003185	--	Received
CX-198C	Gem Supplemental Responses to PPC's Third Set of Interrogatories, No. 46 (redacted excerpts)	Importation/ Infringement/ Remedy	Admission	12/04/08	PPC-TRIAL-003186 thru PPC-TRIAL-003194	PPC Sum. Determination Response Ex. 21 PPC Deposition Ex. PPC	Received

COMPLAINANT'S REVISED TRIAL EXHIBIT LIST

Complainant's Trial Ex. #	Exhibit Description	Purpose	Witness(es)	Document Date	Trial Bates #	Cross Reference	Received
						82	
CX-199C	Gem Responses and Objections to PPC's Fourth Set of Interrogatories	Importation/ Infringement/ Remedy	Admission	02/05/09	PPC-TRIAL-003195 thru PPC-TRIAL-003199	--	Received
CX-200C	Gem Responses and Objections to PPC's Fifth Set of Interrogatories	Importation/ Infringement/ Remedy	Admission	02/23/09	PPC-TRIAL-003200 thru PPC-TRIAL-003211	--	Withdrawn
CX-201C	Fu Ching's Responses to PPC's First Set of Requests For Admission	Importation/ Infringement/ Remedy	Admission	02-26-09	PPC-TRIAL-003212 thru PPC-TRIAL-003219	--	Received
CX-202C	Gem's Responses to PPC's First Set of Requests For Admission	Importation/ Infringement/ Remedy	Admission	02-26-09	PPC-TRIAL-003220 thru PPC-TRIAL-003227	--	Received
CX-203C	Gem's Confidential Exhibit 1 to Response to the Complaint	Importation/ Infringement/ Remedy	Admission	07/03/08	PPC-TRIAL-003228 thru PPC-TRIAL-003231	--	Withdrawn
CX-204C	Fu Ching Confidential Exhibit 1 to Response to the Complaint	Importation/ Infringement/ Remedy	Admission	08/07/08	PPC-TRIAL-003232 thru PPC-TRIAL-003236	--	Received
CX-205C	Fu Ching's Supplemental Discovery Pursuant to Order No. 10, Point I	Importation/ Infringement/ Remedy	Admission	01/08/09	PPC-TRIAL-003237 thru PPC-TRIAL-003248	--	Received
CX-206C	Fu Ching's Supplemental Discovery Pursuant to Order No. 10, Points II and III	Importation/ Infringement/ Remedy	Admission	01/16/09	PPC-TRIAL-003249 thru PPC-TRIAL-003273	--	Received
CX-207C	Fu Ching's Revised Confidential Ex. 1 to Supplemental Discovery Pursuant to Order No. 10, Points II and III	Importation/ Infringement/ Remedy	Admission	--	PPC-TRIAL-003274 thru PPC-TRIAL-003294	--	Received
CX-208C	Fu Ching's Supplemental Discovery	Importation/	Admission	01/09/09	PPC-TRIAL-003295 thru	--	Received

COMPLAINANT'S REVISED TRIAL EXHIBIT LIST

Complainant's Trial Ex. #	Exhibit Description	Purpose	Witness(es)	Document Date	Trial Bates #	Cross Reference	Received
	Pursuant to Order No. 10, Point III	Infringement/ Remedy			PPC-TRIAL-003355		
CX-209	Action Closing Prosecution – Reexamination of U.S. Patent No. 6,530,807	Infringement	Self Authenticating	01/08/09	PPC-TRIAL-003356 thru PPC-TRIAL-003418	--	Rejected
CX-210	PPC CMP connector training video	Domestic Industry	D. McElroy	--	N/A	--	Withdrawn
CX-211	PPC CMP connector training video (excerpt)	Domestic Industry	D. McElroy	--	N/A	--	Received
CX-212	Photo of Digicon S connector (closed position)	Domestic Industry	C. Eldering	--	PPC-TRIAL-003419	--	Received
CX-213	Photo of Fei Yu FY-039B connector (open and closed)	Infringement/ Remedy	C. Eldering	--	PPC-TRIAL-003420 thru PPC-TRIAL-003421	--	Withdrawn
CX-214	Photo of Fei Yu FY-043 connector (closed)	Infringement/ Remedy	C. Eldering	--	PPC-TRIAL-003422	--	Received
CX-215	Photo of PPC CMP6 connector (open and closed)	Domestic Industry	C. Eldering	--	PPC-TRIAL-003423 thru PPC-TRIAL-003424	--	Withdrawn
CX-216	Cross section photo of an exemplary Edali F connector	Infringement/ Remedy	C. Eldering	--	PPC-TRIAL-003425	--	Received
CX-217	Cross section photo of an exemplary Fei Yu model FY-037 F connector	Infringement/ Remedy	C. Eldering	--	PPC-TRIAL-003426	--	Received
CX-218	Cross section photo of an exemplary Fei Yu model FY-038 F connector	Infringement/ Remedy	C. Eldering	--	PPC-TRIAL-003427	--	Withdrawn
CX-219	Cross section photo of an exemplary Fei Yu model FY-039 F connector	Infringement/ Remedy	C. Eldering	--	PPC-TRIAL-003428	--	Received
CX-220	Cross section photo of an exemplary Fei Yu model FY-039A F connector (open position)	Infringement/ Remedy	C. Eldering	--	PPC-TRIAL-003429	--	Received
CX-221	Cross section photo of an exemplary Fei Yu model FY-039A F connector (closed position on cable)	Infringement/ Remedy	C. Eldering	--	PPC-TRIAL-003430	--	Received
CX-222	Cross section photo of an exemplary Fei	Infringement/	C. Eldering	--	PPC-TRIAL-003431	--	Received

COMPLAINANT'S REVISED TRIAL EXHIBIT LIST

Complainant's Trial Ex. #	Exhibit Description	Purpose	Witness(es)	Document Date	Trial Bates #	Cross Reference	Received
	Yu model FY-039B F connector	Remedy					
CX-223	Cross section photo of an exemplary Fei Yu model FY-040B F connector	Infringement/ Remedy	C. Eldering	--	PPC-TRIAL-003432	--	Received
CX-224	Cross section photo of an exemplary Fei Yu model FY-041 F connector	Infringement/ Remedy	C. Eldering	--	PPC-TRIAL-003433	--	Received
CX-225	Cross section photo of an exemplary Fei Yu model FY-043 F connector	Infringement/ Remedy	C. Eldering	--	PPC-TRIAL-003434	--	Received
CX-226	Cross section photo of an exemplary PPC model CMP6 F connector	Domestic Industry	C. Eldering	--	PPC-TRIAL-003435	--	Received
CX-227	Cross section photo of an exemplary PPC model EX 6XL F connector	Domestic Industry	C. Eldering	--	PPC-TRIAL-003436	--	Received
CX-228	Cross section photos of exemplary Gem (model 459-2CS) / Fu Ching (model FM1-710B1) F connectors (brown)	Infringement/ Remedy	C. Eldering	--	PPC-TRIAL-003437 thru PPC-TRIAL-003438	--	Received
CX-229	Cross section photos of exemplary Gem (model 351-5CSQSTP) / Fu Ching (model BF-710A2BU) BNC connectors (blue)	Infringement/ Remedy	C. Eldering	--	PPC-TRIAL-003439 thru PPC-TRIAL-003440	--	Received
CX-230	Cross section photos of exemplary Gem (406-610CS) / Fu Ching (model FM1 710A5GY) F connectors (grey)	Infringement/ Remedy	C. Eldering	--	PPC-TRIAL-003441 thru PPC-TRIAL-003442	--	Received
CX-231	Cross section photos of exemplary Gem (model 406-6CS) / Fu Ching (model FM1 710A4BK) F connectors (black)	Infringement/ Remedy	C. Eldering	--	PPC-TRIAL-003443 thru PPC-TRIAL-003444	--	Received
CX-232C	Set of design drawings for Gem (model 459-2CS) / Fu Ching (model FM1-710B1) F connectors (brown)	Infringement/ Remedy	J. Hsia	--	PPC-TRIAL-003445 thru PPC-TRIAL-003456	--	Withdrawn
CX-233C	Set of design drawings for Gem (model 351-5CSQSTP) / Fu Ching (model BF-710A2BU) BNC connectors (blue)	Infringement/ Remedy	J. Hsia	--	PPC-TRIAL-003457 thru PPC-TRIAL-003465	--	Withdrawn
CX-234C	Set of design drawings for Gem (406-610CS) / Fu Ching (model FM1	Infringement/ Remedy	J. Hsia	--	PPC-TRIAL-003466 thru PPC-TRIAL-003477	--	Withdrawn

COMPLAINANT'S REVISED TRIAL EXHIBIT LIST

Complainant's Trial Ex. #	Exhibit Description	Purpose	Witness(es)	Document Date	Trial Bates #	Cross Reference	Received
	710A5GY) F connectors (grey)						
CX-235C	Set of design drawings for Gem (model 406-6CS) / Fu Ching (model FM1 710A4BK) F connectors (black)	Infringement/ Remedy	J. Hsia	--	PPC-TRIAL-003478 thru PPC-TRIAL-003489	--	Received
CX-236	Photos depicting ¼ sections of Gem / Fu Ching connectors	Infringement/ Remedy	N. Montena	--	PPC-TRIAL-003490 thru PPC-TRIAL-003529	--	Received
CX-237	Photos depicting rotated ¼ sections of Gem / Fu Ching connectors	Infringement/ Remedy	N. Montena	--	PPC-TRIAL-003530 thru PPC-TRIAL-003568	--	Received
CX-238	List of Gem / Fu Ching connector samples examined	Infringement/ Remedy	N. Montena	--	PPC-TRIAL-003569	--	Withdrawn
CX-239C	PPC EX 6XL design drawings	Domestic Industry	N. Montena / R. Haube / D. Rahner	--	PPC-TRIAL-003570 thru PPC-TRIAL-003577	--	Received
CX-240C	PPC CMP6 design drawings	Domestic Industry	N. Montena / R. Haube / D. Rahner	--	PPC-TRIAL-003578 thru PPC-TRIAL-003584	--	Received
CX-241C	Various CMP6 design drawings produced to Gem/Fu Ching by PPC	Domestic Industry	N. Montena / R. Haube / D. Rahner	--	PPC-TRIAL-003585 thru PPC-TRIAL-003603	--	Withdrawn
CX-242	Photo of scraped locking member from Gem/Fu Ching model 406-6CSQS (black)	Infringement/ Remedy	T. Osswald	--	PPC-TRIAL-003604	--	Received
CX-243	Photo of scraped locking member from Gem/Fu Ching model 406-6CSQS (black)	Infringement/ Remedy	T. Osswald	--	PPC-TRIAL-003605	--	Received
CX-244	Photo of scraped locking member from Gem/Fu Ching model 459-2CS (brown)	Infringement/ Remedy	T. Osswald	--	PPC-TRIAL-003606	--	Received
CX-245	Photo of scraped locking member from Gem/Fu Ching model 406-610CS (grey)	Infringement/ Remedy	T. Osswald	--	PPC-TRIAL-003607	--	Received
CX-246C	Various connector design drawings produced by Fu Ching	Infringement/ Remedy	J. Hsia	--	PPC-TRIAL-003608 thru PPC-TRIAL-003706	--	Received
CX-247C	Fu Ching design drawings	Infringement/ Remedy	J. Hsia	--	PPC-TRIAL-003708 thru PPC-TRIAL-003717	--	Received

COMPLAINANT'S REVISED TRIAL EXHIBIT LIST

Complainant's Trial Ex. #	Exhibit Description	Purpose	Witness(es)	Document Date	Trial Bates #	Cross Reference	Received
CX-248C	Fu Ching design drawing for FM1-710 from Fu Ching drawings	Infringement/ Remedy	J. Hsia	--	PPC-TRIAL-003718	--	Withdrawn
CX-249C	Fu Ching design drawing for FM1-710 from Fu Ching drawings (enlarged excerpt)	Infringement/ Remedy	J. Hsia	--	PPC-TRIAL-003719	--	Withdrawn
CX-250	Computer Cable Store invoice	Importation/ Infringement/ Remedy	R. Haube	--	PPC-TRIAL-003720	--	Withdrawn
CX-251	Gem Electronics invoice	Importation/ Infringement/ Remedy	R. Haube	--	PPC-TRIAL-003721	--	Received
CX-252	Additional infringers – documentation (CablesToGo.com)	Importation/ Infringement/ Remedy	R. Haube	--	PPC-TRIAL-003722 thru PPC-TRIAL-003727	--	Received
CX-253	Additional infringers – documentation (Summit Source)	Importation/ Infringement/ Remedy	R. Haube	--	PPC-TRIAL-003728 thru PPC-TRIAL-003739	--	Received
CX-254	Additional infringers – documentation (Altex Computers and Electronics)	Importation/ Infringement/ Remedy	R. Haube	--	PPC-TRIAL-003740 thru PPC-TRIAL-003745	--	Withdrawn
CX-255	Additional infringers – documentation (Amazon)	Importation/ Infringement/ Remedy	R. Haube	--	PPC-TRIAL-003746 thru PPC-TRIAL-003762	--	Received
CX-256	Additional infringers – documentation (Sadoun Satellite Sales)	Importation/ Infringement/ Remedy	R. Haube	--	PPC-TRIAL-003763 thru PPC-TRIAL-003777	--	Received
CX-257	Additional infringers – documentation (Ariza Technology)	Importation/ Infringement/ Remedy	R. Haube	--	PPC-TRIAL-003778 thru PPC-TRIAL-003790	--	Received
CX-258	Additional infringers – documentation (ShowMe Cables)	Importation/ Infringement/	R. Haube	--	PPC-TRIAL-003791 thru PPC-TRIAL-003798	--	Received

COMPLAINANT'S REVISED TRIAL EXHIBIT LIST

Complainant's Trial Ex. #	Exhibit Description	Purpose	Witness(es)	Document Date	Trial Bates #	Cross Reference	Received
		Remedy					
CX-259	Additional infringers – documentation (Lowes N. Syracuse)	Importation/ Infringement/ Remedy	R. Haube	--	PPC-TRIAL-003799 thru PPC-TRIAL-003802	--	Withdrawn
CX-260	Additional infringers – documentation (HomeTech.com)	Importation/ Infringement/ Remedy	R. Haube	--	PPC-TRIAL-003803 thru PPC-TRIAL-003811	--	Received
CX-261	Additional infringers – documentation (skywalker.com)	Importation/ Infringement/ Remedy	R. Haube	--	PPC-TRIAL-003812 thru PPC-TRIAL-003817	--	Received
CX-262	Additional infringers – documentation (cablesnmore.com)	Importation/ Infringement/ Remedy	R. Haube	--	PPC-TRIAL-003818 thru PPC-TRIAL-003832	--	Received
CX-263	Additional infringers – documentation (Cable Wholesale)	Importation/ Infringement/ Remedy	R. Haube	--	PPC-TRIAL-003833 thru PPC-TRIAL-003852	--	Received
CX-264	Additional infringers – documentation (Smart Home)	Importation/ Infringement/ Remedy	R. Haube	--	PPC-TRIAL-003853 thru PPC-TRIAL-003869	--	Received
CX-265	Additional infringers – documentation (MCM Electronics)	Importation/ Infringement/ Remedy	R. Haube	--	PPC-TRIAL-003870 thru PPC-TRIAL-003883	--	Received
CX-266	Additional infringers – documentation (Wired Communications)	Importation/ Infringement/ Remedy	R. Haube	--	PPC-TRIAL-003884 thru PPC-TRIAL-003890	--	Received
CX-267	Additional infringers – documentation (Action Electronics)	Importation/ Infringement/ Remedy	R. Haube	--	PPC-TRIAL-003891 thru PPC-TRIAL-003922	--	Received
CX-268	Additional infringers – documentation (Tessco)	Importation/ Infringement/ Remedy	R. Haube	--	PPC-TRIAL-003923 thru PPC-TRIAL-003928	--	Received

COMPLAINANT'S REVISED TRIAL EXHIBIT LIST

Complainant's Trial Ex. #	Exhibit Description	Purpose	Witness(es)	Document Date	Trial Bates #	Cross Reference	Received
CX-269	Additional infringers – documentation (monoprice.com - 2976)	Importation/ Infringement/ Remedy	R. Haube	--	PPC-TRIAL-003929 thru PPC-TRIAL-003950	--	Received
CX-270	Additional infringers – documentation (monoprice.com - 2973)	Importation/ Infringement/ Remedy	R. Haube	--	PPC-TRIAL-003951 thru PPC-TRIAL-003972	--	Received
CX-271	Additional infringers – documentation (monoprice.com - 2978)	Importation/ Infringement/ Remedy	R. Haube	--	PPC-TRIAL-003973 thru PPC-TRIAL-003994	--	Received
CX-272	Additional infringers – documentation (AV Outlet)	Importation/ Infringement/ Remedy	R. Haube	--	PPC-TRIAL-003995 thru PPC-TRIAL-004000	--	Received
CX-273	Additional infringers – documentation (computercablestore.com)	Importation/ Infringement/ Remedy	R. Haube	--	PPC-TRIAL-004001 thru PPC-TRIAL-004013	--	Received
CX-274	Additional infringers – documentation (sacelec.com)	Importation/ Infringement/ Remedy	R. Haube	--	PPC-TRIAL-004014 thru PPC-TRIAL-004020	--	Withdrawn
CX-275	Additional infringers – documentation (Cansky Electronics Co., Ltd.)	Importation/ Infringement/ Remedy	R. Haube	--	PPC-TRIAL-004021 thru PPC-TRIAL-004026	--	Received
CX-276	Additional infringers – documentation (Zhejiang Cixi Winshow Equip. Co., Ltd. – FT018)	Importation/ Infringement/ Remedy	R. Haube	--	PPC-TRIAL-004027 thru PPC-TRIAL-004032	--	Received
CX-277	Additional infringers – documentation (Zhejiang Cixi Winshow Equip. Co., Ltd. – FT019)	Importation/ Infringement/ Remedy	R. Haube	--	PPC-TRIAL-004033 thru PPC-TRIAL-004038	--	Received
CX-278	Additional infringers – documentation (Zhejiang Cixi Winshow Equip. Co., Ltd. – FT020)	Importation/ Infringement/ Remedy	R. Haube	--	PPC-TRIAL-004039 thru PPC-TRIAL-004044	--	Received
CX-279	Additional infringers – documentation	Importation/	R. Haube	--	PPC-TRIAL-004045 thru PPC-TRIAL-004053	--	Withdrawn

COMPLAINANT'S REVISED TRIAL EXHIBIT LIST

Complainant's Trial Ex. #	Exhibit Description	Purpose	Witness(es)	Document Date	Trial Bates #	Cross Reference	Received
	(Ningbo Yilian Electronics Co., Ltd.)	Infringement/ Remedy					
CX-280	Additional infringers – documentation (Hangzhou Prevail Optoelectronic Equip. Co., Ltd.)	Importation/ Infringement/ Remedy	R. Haube	--	PPC-TRIAL-004940 thru PPC-TRIAL-004960	--	Received
CX-281	Additional infringers – documentation (Alibaba.com Limited)	Importation/ Infringement/ Remedy	R. Haube	--	PPC-TRIAL-004063 thru PPC-TRIAL-004073	--	Received
CX-282	Additional infringers – documentation (ChinaTopSupplier.com)	Importation/ Infringement/ Remedy	R. Haube	--	PPC-TRIAL-004074 thru PPC-TRIAL-004078	--	Received
CX-283	Additional infringers – documentation (AsianNet, Inc.)	Importation/ Infringement/ Remedy	R. Haube	--	PPC-TRIAL-004079 thru PPC-TRIAL-004085	--	Received
CX-284	Additional infringers – documentation (Cablesea Networking Technology Co., Ltd.)	Importation/ Infringement/ Remedy	R. Haube	--	PPC-TRIAL-004086 thru PPC-TRIAL-004091	--	Received
CX-285	Additional infringers – documentation (Global Sources)	Importation/ Infringement/ Remedy	R. Haube	--	PPC-TRIAL-004092 thru PPC-TRIAL-004099	--	Received
CX-286	Additional infringers – documentation (G.T. Internet Information Co., Ltd. (B2B Manufactures.com))	Importation/ Infringement/ Remedy	R. Haube	--	PPC-TRIAL-004100 thru PPC-TRIAL-004104	--	Received
CX-287	Additional infringers – documentation (electronics-in-china.com)	Importation/ Infringement/ Remedy	R. Haube	--	PPC-TRIAL-004105 thru PPC-TRIAL-004109	--	Received
CX-288	PIERS Commodity Report – Shipper Sort	Importation/ Remedy	Self Authenticating	--	PPC-TRIAL-004110 thru PPC-TRIAL-004420	--	Received (Order 25)
CX-289	PIERS Commodity Report – Importer Sort	Importation/ Remedy	Self Authenticating	--	PPC-TRIAL-004421 thru PPC-TRIAL-004731	--	Received (Order 25)

COMPLAINANT'S REVISED TRIAL EXHIBIT LIST

Complainant's Trial Ex. #	Exhibit Description	Purpose	Witness(es)	Document Date	Trial Bates #	Cross Reference	Received
CX-290C	PIERS Company Name Report – Shipper Sort	Importation/ Remedy	Self Authenticating	--	PPC-TRIAL-004732 thru PPC-TRIAL-004835	--	Received (Order 25)
CX-291C	PIERS Company Name Report – Importer Sort	Importation/ Remedy	Self Authenticating	--	PPC-TRIAL-004836 thru PPC-TRIAL-004939	--	Received (Order 25)
CX-292	PPC EX Connector Training Video	Domestic Industry	D. McElroy	--	N/A	--	Received
CX-293	Subpoenas Issued to Analog Devices, Inc.	Rebuttal on patent misuse defense	Self Authenticating	12/08/08	PPC-TRIAL-005379 thru PPC-TRIAL-005382	Exhibit 22 to Response to Respondent's Joint Motion for Summary Determination	Withdrawn
CX-294	Email from Counsel for PPC to Counsel for Analog Devices, Inc.	Rebuttal on patent misuse defense	Self Authenticating	12/19/08	PPC-TRIAL-005383	Exhibit 23 to Response to Respondent's Joint Motion for Summary Determination	Withdrawn
CX-295	Subpoenas for ADI	Rebuttal on patent misuse defense	Self Authenticating	01/05/09	PPC-TRIAL-005384 thru PPC-TRIAL-005387	Exhibit 24 to Response to Respondent's Joint Motion for Summary Determination	Withdrawn
CX-296	Email Exchange between Counsel for PPC, James R. Muldoon and Fu Ching – Gem, John R. Horvack	Rebuttal on patent misuse defense	Self Authenticating	03/2009	PPC-TRIAL-005388 thru PPC-TRIAL-005389	Exhibit 25 to Response to Respondent's Joint Motion for Summary Determination	Withdrawn
CX-297	Discovery Committee Report	Rebuttal on authentication of physical samples	Self Authenticating	10/22/08	PPC-TRIAL-005390 thru PPC-TRIAL-005395	Exhibit 26 to Response to Respondent's Joint Motion for Summary Determination	Withdrawn
CX-298C	Declaration of William H. O'Neil, Jr.	Rebuttal on infringement	W. O'Neil	02/25/09	PPC-TRIAL-005396 thru PPC-TRIAL-005397	Exhibit 6 to Respondent's Joint Motion for Summary Determination	Withdrawn
CX-299	PACER search result for PPC Civil Cases	Rebuttal on equitable estoppel	S. Malak	05/19/09	PPC-TRIAL-005398 thru PPC-TRIAL-005401	--	Withdrawn

COMPLAINANT'S REVISED TRIAL EXHIBIT LIST

Complainant's Trial Ex. #	Exhibit Description	Purpose	Witness(es)	Document Date	Trial Bates #	Cross Reference	Received
		and patent misuse					
CX-300[1]	Stipulation regarding non-respondent exhibits	Importation / Infringement / Remedy	R. Haube	7/7/09	--		Received
CX-301	U.S. Patent No. 6,530,807	Importation / Infringement / Remedy	C. Eldering	7/7/09	--		Rejected
CX-302C	Chinese installation instruction sheet prepared by Kwan Hong Liu	Importation / Infringement / Remedy	J. Hsia	--			Rejected
CX-303C	Chinese installation instruction sheet using tool prepared by Kwan Hong Liu	Importation / Infringement / Remedy	J. Hsia	--			Withdrawn
CX-304C	Chinese installation instruction sheet	Importation / Infringement / Remedy	J. Hsia	--			Withdrawn
CX-305	PPC listing of deposition designations of party opponents	Importation / Infringement / Remedy	--	--			Received
CX-306	PPC listing of discovery admissions for admission at trial	Importation / Infringement / Remedy	--	--			Received
CX-307	Yilian webpage	Importation / Infringement / Remedy	B. Noll	--			Received
CDX-1	Claim Chart showing infringement of '194 Patent by Fei Yu model FY043 connector	Infringement/ Remedy	C. Eldering	--	PPC-TRIAL-004961 thru PPC-TRIAL-004963	Complaint Ex. 17	Withdrawn
CDX-2	Illustrations of infringement of the '194 Patent by Fei Yu model FY043 connector	Infringement/ Remedy	C. Eldering	--	PPC-TRIAL-004964	Complaint Ex. 18	Withdrawn

[1] RED = added at trial

COMPLAINANT'S REVISED TRIAL EXHIBIT LIST

Complainant's Trial Ex. #	Exhibit Description	Purpose	Witness(es)	Document Date	Trial Bates #	Cross Reference	Received
	(open position)						
CDX-3	Illustrations of infringement of the '194 Patent by Fei Yu model FY043 connector (closed position)	Infringement/ Remedy	C. Eldering	--	PPC-TRIAL-004965	Complaint Ex. 19	Withdrawn
CDX-4	Claim Chart showing infringement of the '194 Patent by Fei Yu model FY037 connector	Infringement/ Remedy	C. Eldering	--	PPC-TRIAL-004966 thru PPC-TRIAL-004968	Complaint Ex. 20	Withdrawn
CDX-5	Illustrations of infringement of the '194 Patent by Fei Yu model FY037 connector (open position)	Infringement/ Remedy	C. Eldering	--	PPC-TRIAL-004969	Complaint Ex. 21	Withdrawn
CDX-6	Illustrations of infringement of the '194 Patent by Fei Yu model FY037 connector (closed position)	Infringement/ Remedy	C. Eldering	--	PPC-TRIAL-004970	Complaint Ex. 22	Withdrawn
CDX-7	Claim Chart showing infringement of the '194 Patent by Fei Yu model FY038 connector	Infringement/ Remedy	C. Eldering	--	PPC-TRIAL-004971 thru PPC-TRIAL-004973	Complaint Ex. 23	Withdrawn
CDX-8	Illustrations of infringement of the '194 Patent by Fei Yu model FY038 connector	Infringement/ Remedy	C. Eldering	--	PPC-TRIAL-004974	Complaint Ex. 24	Withdrawn
CDX-9	Claim Chart showing infringement of the '194 Patent by Edali connectors	Infringement/ Remedy	C. Eldering	--	PPC-TRIAL-004975 thru PPC-TRIAL-004977	Complaint Ex. 26	Withdrawn
CDX-10	Illustrations of infringement of the '194 Patent by Edali connectors (open position)	Infringement/ Remedy	C. Eldering	--	PPC-TRIAL-004978	Complaint Ex. 27	Withdrawn
CDX-11	Illustrations of infringement of the '194 Patent by Edali connectors (closed position)	Infringement/ Remedy	C. Eldering	--	PPC-TRIAL-004979	Complaint Ex. 28	Withdrawn
CDX-12	Claim Chart showing infringement of the '257 Patent by Fei Yu model FY039B connector	Infringement/ Remedy	C. Eldering	--	PPC-TRIAL-004980 thru PPC-TRIAL-004982	Complaint Ex. 29	Withdrawn
CDX-13	Illustrations of infringement of the '257 Patent by by Fei Yu model FY039B connector (open position)	Infringement/ Remedy	C. Eldering	--	PPC-TRIAL-004983	Complaint Ex. 30	Withdrawn

COMPLAINANT'S REVISED TRIAL EXHIBIT LIST

Complainant's Trial Ex. #	Exhibit Description	Purpose	Witness(es)	Document Date	Trial Bates #	Cross Reference	Received
CDX-14	Illustrations of infringement of the '257 Patent by by Fei Yu model FY039B connector (closed position)	Infringement/ Remedy	C. Eldering	--	PPC-TRIAL-004984	Complaint Ex. 31	Withdrawn
CDX-15	Illustrations of infringement of the '257 Patent by by Fei Yu model FY040B connector (open position)	Infringement/ Remedy	C. Eldering	--	PPC-TRIAL-004985	Complaint Ex. 32	Withdrawn
CDX-16	Illustrations of infringement of the '257 Patent by by Fei Yu model FY040B connector (closed position)	Infringement/ Remedy	C. Eldering	--	PPC-TRIAL-004986	Complaint Ex. 33	Withdrawn
CDX-17	Illustrations of infringement of the '257 Patent by by Fei Yu model FY039 connector (open position)	Infringement/ Remedy	C. Eldering	--	PPC-TRIAL-004987	Complaint Ex. 34	Withdrawn
CDX-18	Illustrations of infringement of the '257 Patent by by Fei Yu model FY039 connector (closed position)	Infringement/ Remedy	C. Eldering	--	PPC-TRIAL-004988	Complaint Ex. 35	Withdrawn
CDX-19	Claim Chart showing infringement of the '257 Patent by Fu Ching connectors	Infringement/ Remedy	C. Eldering	--	PPC-TRIAL-004989 thru PPC-TRIAL-004990	Complaint Ex. 37	Withdrawn
CDX-20	Illustrations of infringement of '257 Patent by Fu Ching connectors	Infringement/ Remedy	C. Eldering	--	PPC-TRIAL-004991	Complaint Ex. 38	Withdrawn
CDX-21	Claim Chart with illustration of infringement of '539 Patent by Fei Yu model FY043 connector	Infringement/ Remedy	C. Eldering	--	PPC-TRIAL-004992	Complaint Ex. 39	Withdrawn
CDX-22	Claim Chart with illustrations of infringement of '076 Patent by Fei Yu model FY039B connector	Infringement/ Remedy	C. Eldering	--	PPC-TRIAL-004993	Complaint Ex. 41	Withdrawn
CDX-23	Practice Claim Chart for '194 Patent by PPC EX Series connector	Domestic Industry	C. Eldering	--	PPC-TRIAL-004994 thru PPC-TRIAL-004996	Complaint Ex. 42	Withdrawn
CDX-24	Practice Claim Chart for '257 Patent by PPC CMP Series connector	Domestic Industry	C. Eldering	--	PPC-TRIAL-004997 thru PPC-TRIAL-004998	Complaint Ex. 43	Withdrawn
CDX-25	Practice Claim Chart for '539 Patent by PPC Model EX6 connector	Domestic Industry	C. Eldering	--	PPC-TRIAL-004999	Complaint Ex. 44	Withdrawn

COMPLAINANT'S REVISED TRIAL EXHIBIT LIST

Complainant's Trial Ex. #	Exhibit Description	Purpose	Witness(es)	Document Date	Trial Bates #	Cross Reference	Received
CDX-26C	Practice Claim Chart with illustrations of '539 Patent by PPC licensee's connector	Domestic Industry	C. Eldering	--	PPC-TRIAL-005000	Complaint Ex. 45	Withdrawn
CDX-27	Practice Claim Chart with illustrations of '076 Patent by PPC CMP Series connectors	Domestic Industry	C. Eldering	--	PPC-TRIAL-005001 thru PPC-TRIAL-005002	Complaint Ex. 46	Withdrawn
CDX-28	Claim chart of GEM/Fu Ching products infringing the '257 patent (redacted to only claims 1 and 5)	Infringement/ Remedy	C. Eldering	--	PPC-TRIAL-005003 thru PPC-TRIAL-005010	PPC Sum. Determination Ex. 42, Ex. C1 PPC Sum. Determination Response Ex. 16, Ex. C1	Received
CDX-29	Claim chart of Fei Yu products infringing the '257 patent	Infringement/ Remedy	C. Eldering	--	PPC-TRIAL-005011 thru PPC-TRIAL-005029	PPC Sum. Determination Ex. 42, Ex. C2	Received
CDX-30	Claim chart illustrating practice of the '257 patent by PPC	Domestic Industry	C. Eldering	--	PPC-TRIAL-005030 thru PPC-TRIAL-005034	PPC Sum. Determination Ex. 42, C3	Received
CDX-31	Claim chart of Fei Yu products infringing the '194 patent	Infringement/ Remedy	C. Eldering	--	PPC-TRIAL-005035 thru PPC-TRIAL-005066	PPC Sum. Determination Ex. 42, Ex. D1	Received
CDX-32	Cross-section illustrating an exemplary compression connector attached to a coaxial cable	Infringement/ Remedy	C. Eldering	--	PPC-TRIAL-005067	PPC Sum. Determination Ex. 42, Ex. D2	Received
CDX-33	Claim chart of Edali products infringing the '194 patent	Infringement/ Remedy	C. Eldering	--	PPC-TRIAL-005068 thru PPC-TRIAL-005075	PPC Sum. Determination Ex. 42, Ex. D3	Received
CDX-34	Claim chart illustrating practice of the '194 patent by PPC	Domestic Industry	C. Eldering	--	PPC-TRIAL-005076 thru PPC-TRIAL-005083	PPC Sum. Determination Ex. 42, Ex. D4	Received
CDX-35	Claim chart illustrating infringement and practice of the '076 patent	Domestic Industry/ Infringement/ Remedy	C. Eldering	--	PPC-TRIAL-005084 thru PPC-TRIAL-005086	PPC Sum. Determination Ex. 42, Ex. E	Withdrawn
CDX-36	Claim chart illustrating infringement and practice of the '539 patent	Domestic Industry/ Infringement/ Remedy	C. Eldering	--	PPC-TRIAL-005087 thru PPC-TRIAL-005088	PPC Sum. Determination Ex. 42, Ex. F	Received
CDX-37	Schematic of undeformed (top) and deformed (bottom) tubular locking	Infringement/ Remedy	T. Osswald	02/26/09	PPC-TRIAL-005089	Figure 1 to Osswald Declaration / Report	Received

COMPLAINANT'S REVISED TRIAL EXHIBIT LIST

Complainant's Trial Ex. #	Exhibit Description	Purpose	Witness(es)	Document Date	Trial Bates #	Cross Reference	Received
	members						
CDX-38	Schematic of the contact area between locking member and connector body	Infringement/ Remedy	T. Osswald	02/26/09	PPC-TRIAL-005090	Figure 2 to Osswald Declaration / Report	Received
CDX-39	Tubular locking member with scraped circumferential region	Infringement/ Remedy	T. Osswald	02/26/09	PPC-TRIAL-005091	Figure 3 to Osswald Declaration / Report	Received
CDX-40	Micrograph of a cable connector body-tubular locking member assembly	Infringement/ Remedy	T. Osswald	02/26/09	PPC-TRIAL-005092	Figure 4 to Osswald Declaration / Report	Received
CDX-41	Deformed tubular locking member cross-section with stress distribution at 10, 100 and 1000 hours after assembly	Infringement/ Remedy	T. Osswald	02/26/09	PPC-TRIAL-005093	Figure 5 to Osswald Declaration / Report	Received
CDX-42	Gem connector installation animation video	Infringement/ Remedy	C. Eldering / T. Osswald	--	PPC-TRIAL-005094	--	Received
CDX-43	Labeled cross section photo of an exemplary Edali F connector	Infringement/ Remedy	C. Eldering	--	PPC-TRIAL-005095	--	Withdrawn
CDX-44	Labeled cross section photo of an exemplary Fei Yu model FY-037 F connector	Infringement/ Remedy	C. Eldering	--	PPC-TRIAL-005096	--	Withdrawn
CDX-45	Labeled cross section photo of an exemplary Fei Yu model FY-039 F connector	Infringement/ Remedy	C. Eldering	--	PPC-TRIAL-005097	--	Withdrawn
CDX-46	Labeled cross section photo of an exemplary Fei Yu model FY-039A F connector	Infringement/ Remedy	C. Eldering	--	PPC-TRIAL-005098	--	Withdrawn
CDX-47	Labeled cross section photo of an exemplary Fei Yu model FY-039B F connector	Infringement/ Remedy	C. Eldering	--	PPC-TRIAL-005099	--	Withdrawn
CDX-48	Labeled cross section photo of an exemplary Fei Yu model FY-040B F connector	Infringement/ Remedy	C. Eldering	--	PPC-TRIAL-005100	--	Withdrawn
CDX-49	Labeled cross section photo of an exemplary Fei Yu model FY-041 F	Infringement/ Remedy	C. Eldering	--	PPC-TRIAL-005101	--	Withdrawn

COMPLAINANT'S REVISED TRIAL EXHIBIT LIST

Complainant's Trial Ex. #	Exhibit Description	Purpose	Witness(es)	Document Date	Trial Bates #	Cross Reference	Received
	connector						
CDX-50	Labeled cross section photo of an exemplary Fei Yu model FY-043 connector	Infringement/ Remedy	C. Eldering	--	PPC-TRIAL-005102	--	Withdrawn
CDX-51	Labeled cross section photo of an exemplary Gem (model 406-6CS) / Fu Ching (model FM1-710A4BK) F connector, model	Infringement/ Remedy	C. Eldering	--	PPC-TRIAL-005103	Based on epoxy photo PPC Bates No. PPC/ITC014580	Withdrawn
CDX-52	Labeled cross section photo of an exemplary PPC CMP6 F connector	Domestic Industry	C. Eldering	--	PPC-TRIAL-005104	Based on epoxy photo PPC Bates No. PPC/ITC014609	Withdrawn
CDX-53	Labeled cross section photo of an exemplary PPC EX 6XL F connector	Domestic Industry	C. Eldering	--	PPC-TRIAL-005105	--	Withdrawn
CDX-54	Labeled cross section photo of an exemplary cabled F connector	Domestic Industry	C. Eldering	--	PPC-TRIAL-005106	--	Withdrawn
CDX-55	Additional infringers – Claim charts of additional products infringing the '257 patent	Infringement/ Remedy	C. Eldering	--	PPC-TRIAL-005107 thru PPC-TRIAL-005268	--	Received
CDX-56	Additional infringers – Claim charts of additional products infringing the '194 patent	Infringement/ Remedy	C. Eldering	--	PPC-TRIAL-005269 thru PPC-TRIAL-005375	--	Received
CDX-57	Additional infringers – Claim charts of additional products infringing the '076 patent	Infringement/ Remedy	C. Eldering	--	PPC-TRIAL-005376 thru PPC-TRIAL-005378	--	Received
CDX-58	Additional infringers – Claim charts of additional products infringing the '539 patent	Infringement/ Remedy	C. Eldering	--	--	--	Withdrawn
CDX-59	Trimmer tool	Infringement / Remedy	D. McElroy	--	--	--	Withdrawn
CDX-60	Bundle of coaxial cables (RG6)	Infringement / Remedy	D. McElroy	--	--	--	Withdrawn

COMPLAINANT'S REVISED TRIAL EXHIBIT LIST

Complainant's Trial Ex. #	Exhibit Description	Purpose	Witness(es)	Document Date	Trial Bates #	Cross Reference	Received
CDX-61	Compression tool	Infringement / Remedy	D. McElroy	--	--	--	Withdrawn
CDX-62	Bundle of cables (RG59)	Infringement / Remedy	D. McElroy	--	--	--	Withdrawn
CDX-63	Bundle of cables (6 Quad)	Infringement / Remedy	D. McElroy	--	--	--	Withdrawn
CDX-64	Letter-size version of claim boards with numbered elements for '194 Patent	Infringement / Remedy	C. Eldering	--	--	--	Received
CDX-65	Letter-size version of claim boards with numbered elements for '257 Patent	Infringement / Remedy	C. Eldering	--	--	--	Received
CPX-1	Physical Exhibit - PPC model EX6	Domestic Industry	R. Haube	--		Complaint Phys. Ex. 1	Withdrawn
CPX-2	Physical Exhibit - PPC model EX59	Domestic Industry	R. Haube	--		Complaint Phys. Ex. 3	Withdrawn
CPX-3	Physical Exhibit - PPC model EX59XL	Domestic Industry	R. Haube	--		Complaint Phys. Ex. 4	Withdrawn
CPX-4	Physical Exhibit - PPC model CMP6Q	Domestic Industry	R. Haube	--		Complaint Phys. Ex. 6	Withdrawn
CPX-5	Physical Exhibit - PPC model CMP59	Domestic Industry	R. Haube	--		Complaint Phys. Ex. 7	Withdrawn
CPX-6	Physical Exhibit - PPC model CMP59Q	Domestic Industry	R. Haube	--		Complaint Phys. Ex. 8	Withdrawn
CPX-7	Physical Exhibit - Fei Yu model FY043	Infringement/ Remedy	R. Haube	--		Complaint Phys. Ex. 9	Withdrawn
CPX-8	Physical Exhibit - Fei Yu model FY037	Infringement/ Remedy	R. Haube	--		Complaint Phys. Ex. 10	Received
CPX-9	Physical Exhibit - Fei Yu model FY038	Infringement/ Remedy	R. Haube	--		Complaint Phys. Ex. 11	Withdrawn
CPX-10	Physical Exhibit - Edali / Aska Connectors	Infringement/ Remedy	R. Haube	--		Complaint Phys. Ex. 12	Received
CPX-11	Physical Exhibit - Edali / Aska model	Infringement/	R. Haube	--		Complaint	Withdrawn

COMPLAINANT'S REVISED TRIAL EXHIBIT LIST

Complainant's Trial Ex. #	Exhibit Description	Purpose	Witness(es)	Document Date	Trial Bates #	Cross Reference	Received
	FPL56 (on cable)	Remedy				Phys. Ex. 13	
CPX-12	Physical Exhibit - Fei Yu model FY039B	Infringement/ Remedy	R. Haube	--		Complaint Phys. Ex. 14	Withdrawn
CPX-13	Physical Exhibit - Fei Yu model FY039	Infringement/ Remedy	R. Haube	--		Complaint Phys. Ex. 15	Withdrawn
CPX-14	Physical Exhibit – Sample Fu Ching / Gem connectors	Infringement/ Remedy	R. Haube	--		Complaint Phys. Ex. 16	Withdrawn
CPX-15	Physical Exhibit - Sealed bag of 0406-6CS F Plug, Compression Seal RG6, Qty 100	Importation/ Infringement/ Remedy	R. Haube	--		PPC Sum. Determination Response Ex. 18, Ex. C	Withdrawn
CPX-16	Physical Exhibit - Product sample of a commercial embodiment of the Samchisen '675 Patent	Infringement	R. Haube	--		PPC Sum. Determination Response Ex. 28	Withdrawn
CPX-17	Physical Exhibit - Connector with grey compression ring	Infringement/ Remedy	R. Haube	--		PPC Deposition Ex. PPC 1	Received
CPX-18	Physical Exhibit - Connector with brown compression ring	Infringement/ Remedy	R. Haube	--		PPC Deposition Ex. PPC 2	Withdrawn
CPX-19	Physical Exhibit - Bag of connectors – 0406-6CS, F plug, Comp Seal, RG6, Qty 100	Importation/ Infringement/ Remedy	J.Hsia	--		PPC Deposition Ex. PPC 38	Received
CPX-20	Physical Exhibit - One Gem/Fu Ching connector (brown plastic sleeve), F connector RG59	Infringement/ Remedy	R. Haube	--		PPC Deposition Ex. PPC 39	Withdrawn
CPX-21	Physical Exhibit - Fu Ching F Connector marked with Patent No. 6,241,553	Infringement/ Remedy	R. Haube	--		PPC Deposition Ex. PPC 61	Received
CPX-22	Physical Exhibit - Cross section epoxies of an exemplary Fei Yu model FY-037 F connector	Infringement/ Remedy	C. Eldering	--		--	Received
CPX-23	Physical Exhibit - Cross section epoxies of an exemplary Fei Yu model FY-038 F connector	Infringement/ Remedy	C. Eldering	--		--	Received

COMPLAINANT'S REVISED TRIAL EXHIBIT LIST

Complainant's Trial Ex. #	Exhibit Description	Purpose	Witness(es)	Document Date	Trial Bates #	Cross Reference	Received
CPX-24	Physical Exhibit - Cross section epoxies of an exemplary Fei Yu model FY-039 F connector	Infringement/ Remedy	C. Eldering	--		--	Received
CPX-25	Physical Exhibit - Cross section epoxies of an exemplary Fei Yu model FY-039A F connector (open position)	Infringement/ Remedy	C. Eldering	--		--	Received
CPX-26	Physical Exhibit - Cross section epoxies of an exemplary Fei Yu model FY-039A F connector (closed position on cable)	Infringement/ Remedy	C. Eldering	--		--	Received
CPX-27	Physical Exhibit - Cross section epoxies of an exemplary Fei Yu model FY-039B F connector	Infringement/ Remedy	C. Eldering	--		--	Received
CPX-28	Physical Exhibit - Cross section epoxies of an exemplary Fei Yu model FY-040B F connector	Infringement/ Remedy	C. Eldering	--		--	Received
CPX-29	Physical Exhibit - Cross section epoxies of an exemplary Fei Yu model FY-041 F connector	Infringement/ Remedy	C. Eldering	--		--	Received
CPX-30	Physical Exhibit - Cross section epoxies of an exemplary Fei Yu model FY-043 F connector	Infringement/ Remedy	C. Eldering	--		--	Received
CPX-31	Physical Exhibit - Cross section epoxies of an exemplary PPC model CMP6 F connector	Domestic Industry	C. Eldering	--		--	Received
CPX-32	Physical Exhibit - Cross section epoxies of an exemplary PPC model EX 6XL F connector	Domestic Industry	C. Eldering	--		--	Received
CPX-33	Physical Exhibit - Cross section expoxies of exemplary Gem (model 459-2CS) / Fu Ching (model FM1-710B1) F connectors (brown)	Infringement/ Remedy	C. Eldering	--		PPC Deposition PPC 40	Received

COMPLAINANT'S REVISED TRIAL EXHIBIT LIST

Complainant's Trial Ex. #	Exhibit Description	Purpose	Witness(es)	Document Date	Trial Bates #	Cross Reference	Received
CPX-34	Physical Exhibit - Cross section epoxies of exemplary Gem (model 351-5CSQSTP) / Fu Ching (model BF-710A2BU) BNC connectors (blue)	Infringement/ Remedy	C. Eldering	--		--	Received
CPX-35	Physical Exhibit - Cross section epoxies of exemplary Gem (406-610CS) / Fu Ching (model FM1 710A5GY) F connectors (grey)	Infringement/ Remedy	C. Eldering	--		--	Received
CPX-36	Physical Exhibit - Cross section epoxies of exemplary Gem (model 406-6CS) / Fu Ching (model FM1 710A4BK) F connectors (black)	Infringement/ Remedy	C. Eldering	--		--	Received
CPX-37	Physical Exhibit – Fei Yu model FY-037 F connector	Infringement/ Remedy	R. Haube	--		--	Received
CPX-38	Physical Exhibit – Fei Yu model FY-038 F connector	Infringement/ Remedy	R. Haube	--		--	Withdrawn
CPX-39	Physical Exhibit – Fei Yu model FY-039 F connector	Infringement/ Remedy	R. Haube	--		--	Received
CPX-40	Physical Exhibit – Fei Yu model FY-039A F connector	Infringement/ Remedy	R. Haube	--		--	Received
CPX-41	Physical Exhibit – Fei Yu model FY-039B F connector	Infringement/ Remedy	R. Haube	--		--	Received
CPX-42	Physical Exhibit – Fei Yu model FY-040B F connector	Infringement/ Remedy	R. Haube	--		--	Received
CPX-43	Physical Exhibit – Fei Yu model FY-041 F connector	Infringement/ Remedy	R. Haube	--		--	Received
CPX-44	Physical Exhibit – Fei Yu model FY-043 F connector	Infringement/ Remedy	R. Haube	--		--	Received
CPX-45	Physical Exhibit – PPC model CMP6 F connector	Domestic Industry	R. Haube	--		--	Received
CPX-46	Physical Exhibit – PPC model EX 6XL F	Domestic Industry	R. Haube	--		--	Received

COMPLAINANT'S REVISED TRIAL EXHIBIT LIST

Complainant's Trial Ex. #	Exhibit Description	Purpose	Witness(es)	Document Date	Trial Bates #	Cross Reference	Received
	connector						
CPX-47	Physical Exhibit – Gem / Fu Ching connectors produced by Gem / Fu Ching and ¼ sectioned and examined by PPC	Infringement/ Remedy	N. Montena	--		--	Received
CPX-48	Physical Exhibit - Scraped locking member from Gem/Fu Ching model 406-6CSQS (black)	Infringement/ Remedy	T. Osswald	--		--	Received
CPX-49	Physical Exhibit - Scraped locking member from Gem/Fu Ching model 406-6CSQS (black)	Infringement/ Remedy	T. Osswald	--		--	Received
CPX-50	Physical Exhibit - Scraped locking member from Gem/Fu Ching model 459-2CS (brown)	Infringement/ Remedy	T. Osswald	--		--	Received
CPX-51	Physical Exhibit - Scraped locking member from Gem/Fu Ching model 406-610CS (grey)	Infringement/ Remedy	T. Osswald	--		--	Received
CPX-52	Physical Exhibit - LRC SNS6 connector	Infringement	R. Haube	--		--	Received
CPX-53	Physical Exhibit - Exemplary Thomas & Betts Snap-N-Seal connectors	Infringement	R. Haube	--		--	Received
CPX-54	Physical Exhibit – Sealed bag of 100 Gem connectors, model 406-6CSQS (blue) purchased by PPC	Importation/ Infringement/ Remedy	R. Haube	--		--	Received
CPX-55	Physical Exhibit – Loose bag of Gem connectors, model 406-6CSQS (blue) purchased by PPC	Importation/ Infringement/ Remedy	R. Haube	--		--	Withdrawn
CPX-56	Physical Exhibit – Bag of 100 Gem connectors, model 459-2CS (brown) purchased by PPC	Importation/ Infringement/ Remedy	R. Haube	--		--	Received
CPX-57	Physical Exhibit – Loose bag of Gem connectors, model 459-2CS (brown) purchased by PPC	Importation/ Infringement/ Remedy	R. Haube	--		--	Withdrawn

COMPLAINANT'S REVISED TRIAL EXHIBIT LIST

Complainant's Trial Ex. #	Exhibit Description	Purpose	Witness(es)	Document Date	Trial Bates #	Cross Reference	Received
CPX-58	Physical Exhibit – Sealed bag of 100 Gem connectors, model 406-610CS (grey) purchased by PPC	Importation/ Infringement/ Remedy	R. Haube	--		--	Received
CPX-59	Physical Exhibit – Loose bag of Gem connectors, model 406-610CS (grey) purchased by PPC	Importation/ Infringement/ Remedy	R. Haube	--		--	Withdrawn
CPX-60	Physical Exhibit – Sealed bag of 100 Gem connectors, model 406-6CS (black) purchased by PPC	Importation/ Infringement/ Remedy	R. Haube	--		--	Received
CPX-61	Physical Exhibit – Loose bag of Gem connectors, model 406-6CS (black) purchased by PPC	Importation/ Infringement/ Remedy	R. Haube	--		--	Received
CPX-62	Physical Exhibit – Loose bag of Gem connectors, model 459-10CS (cream) purchased by PPC	Importation/ Infringement/ Remedy	R. Haube	--		--	Received
CPX-63	Physical Exhibit – Additional infringers – physical samples (CablesToGo.com)	Importation/ Infringement/ Remedy	R. Haube	--		--	Received
CPX-64	Physical Exhibit – Additional infringers – physical samples (Summit Source)	Importation/ Infringement/ Remedy	R. Haube	--		--	Received
CPX-65	Physical Exhibit – Additional infringers – physical samples (Altex Computers and Electronics)	Importation/ Infringement/ Remedy	R. Haube	--		--	Withdrawn
CPX-66	Additional infringers – physical samples (Amazon)	Importation/ Infringement/ Remedy	R. Haube	--		--	Received
CPX-67	Physical Exhibit – Additional infringers – physical samples (Sadoun Satellite Sales)	Importation/ Infringement/ Remedy	R. Haube	--		--	Received
CPX-68	Physical Exhibit – Additional infringers –	Importation/	R. Haube	--		--	Received

COMPLAINANT'S REVISED TRIAL EXHIBIT LIST

Complainant's Trial Ex. #	Exhibit Description	Purpose	Witness(es)	Document Date	Trial Bates #	Cross Reference	Received
	physical samples (Ariza Technology)	Infringement/ Remedy					
CPX-69	Physical Exhibit – Additional infringers – physical samples (ShowMe Cables)	Importation/ Infringement/ Remedy	R. Haube	--		--	Received
CPX-70	Physical Exhibit – Additional infringers – physical samples (Lowes N. Syracuse)	Importation/ Infringement/ Remedy	R. Haube	--		--	Withdrawn
CPX-71	Physical Exhibit – Additional infringers – physical samples (HomeTech.com)	Importation/ Infringement/ Remedy	R. Haube	--		--	Received
CPX-72	Physical Exhibit – Additional infringers – physical samples (skywalker.com)	Importation/ Infringement/ Remedy	R. Haube	--		--	Received
CPX-73	Physical Exhibit – Additional infringers – physical samples (cablesnmore.com)	Importation/ Infringement/ Remedy	R. Haube	--		--	Received
CPX-74	Physical Exhibit – Additional infringers – physical samples (Cable Wholesale)	Importation/ Infringement/ Remedy	R. Haube	--		--	Received
CPX-75	Physical Exhibit – Additional infringers – physical samples (Smart Home)	Importation/ Infringement/ Remedy	R. Haube	--		--	Received
CPX-76	Physical Exhibit – Additional infringers – physical samples (MCM Electronics)	Importation/ Infringement/ Remedy	R. Haube	--		--	Received
CPX-77	Physical Exhibit – Additional infringers – physical samples (Wired Communications)	Importation/ Infringement/ Remedy	R. Haube	--		--	Received
CPX-78	Physical Exhibit – Additional infringers – physical samples (Action Electronics)	Importation/ Infringement/	R. Haube	--		--	Received

COMPLAINANT'S REVISED TRIAL EXHIBIT LIST

Complainant's Trial Ex. #	Exhibit Description	Purpose	Witness(es)	Document Date	Trial Bates #	Cross Reference	Received
		Remedy					
CPX-79	Physical Exhibit – Additional infringers – physical samples (Tessco)	Importation/ Infringement/ Remedy	R. Haube	--		--	Received
CPX-80	Physical Exhibit – Additional infringers – physical samples (monoprice.com – 2976)	Importation/ Infringement/ Remedy	R. Haube	--		--	Received
CPX-81	Physical Exhibit – Additional infringers – physical samples (monoprice.com – 2973)	Importation/ Infringement/ Remedy	R. Haube	--		--	Received
CPX-82	Physical Exhibit – Additional infringers – physical samples (monoprice.com – 2978)	Importation/ Infringement/ Remedy	R. Haube	--		--	Received
CPX-83	Physical Exhibit – Additional infringers – physical samples (AV Outlet)	Importation/ Infringement/ Remedy	R. Haube	--		--	Received
CPX-84	Physical Exhibit – Additional infringers – physical samples (computercablestore.com)	Importation/ Infringement/ Remedy	R. Haube	--		--	Received
CPX-85	Physical Exhibit – Additional infringers – physical samples (sacelec.com)	Importation/ Infringement/ Remedy	R. Haube	--		--	Withdrawn
CPX-86	Physical Exhibit – Additional infringers – physical samples (Cansky Electronics Co., Ltd.)	Importation/ Infringement/ Remedy	R. Haube	--		--	Received
CPX-87	Physical Exhibit – Additional infringers – physical samples (Zhejiang Cixi Winshow Equip. Co., Ltd. – FT018)	Importation/ Infringement/ Remedy	R. Haube	--		--	Received
CPX-88	Physical Exhibit – Additional infringers – physical samples (Zhejiang Cixi Winshow Equip. Co., Ltd. – FT019)	Importation/ Infringement/ Remedy	R. Haube	--		--	Received

COMPLAINANT'S REVISED TRIAL EXHIBIT LIST

Complainant's Trial Ex. #	Exhibit Description	Purpose	Witness(es)	Document Date	Trial Bates #	Cross Reference	Received
CPX-89	Physical Exhibit – Additional infringers – physical samples (Zhejiang Cixi Winshow Equip. Co., Ltd. – FT020)	Importation/ Infringement/ Remedy	R. Haube	--		--	Received
CPX-90	Physical Exhibit – Additional infringers – physical samples (Hangzhou Prevail Optoelectronic Equip. Co., Ltd.)	Importation/ Infringement/ Remedy	R. Haube	--		--	Received
CPX-91	Physical Exhibit – PPC model CMP6 F connector	Domestic Industry	R. Haube	--		Complaint Phys. Ex. 5	Withdrawn
CPX-92	Physical Exhibit – PPC model EX 6XL F connector	Domestic Industry	R. Haube	--		Complaint Phys. Ex. 2	Withdrawn
CPX-93	Physical Exhibit – PPC model CMP6 in open and closed positions (design)	Domestic Industry	C. Eldering	--		--	Withdrawn
CPX-94	Physical Exhibit – Digicon S connector in open and closed positions (design)	Domestic Industry	C. Eldering	--		--	Received
CPX-95	Physical Exhibit – Fei Yu FY 039B connector in open and closed positions (design)	Importation/ Infringement/ Remedy	C. Eldering	--		--	Withdrawn
CPX-96	Physical Exhibit – Fei Yu FY 043 connector in closed position (design)	Importation/ Infringement/ Remedy	C. Eldering	--		--	Received
CPX-97	Physical Exhibit – PPC model CMP6 F connector (CPX-45) installed on cable	Domestic Industry	D. McElroy	--	--	--	Received
CPX-98	Physical Exhibit - LRC SNS6 connector (CPX-52) installed on cable	Importation/ Infringement/ Remedy	D. McElroy	--	--	--	Received
CPX-99	Physical Exhibit – Gem model 459-2CS (brown) purchased by PPC (CPX-56) installed on cable	Importation/ Infringement/ Remedy	D. McElroy	--	--	--	Received
CPX-100	Physical Exhibit – Gem model 406-610CS (grey) purchased by PPC (CPX-58) installed on cable	Importation/ Infringement/ Remedy	D. McElroy	--	--	--	Received

COMPLAINANT'S REVISED TRIAL EXHIBIT LIST

Complainant's Trial Ex. #	Exhibit Description	Purpose	Witness(es)	Document Date	Trial Bates #	Cross Reference	Received
CPX-101	Physical Exhibit - Gem model 406-6CS (black) purchased by PPC (CPX-60) installed on cable	Importation/ Infringement/ Remedy	D. McElroy	--	--	--	Received
CPX-102	Physical Exhibit – Separated Gem model 406-6CS (black) purchased by PPC (CPX-60)	Importation/ Infringement/ Remedy	D. McElroy	--	--	--	Received
CPX-103	Physical Exhibit – Gem model 459-10CS (cream) purchased by PPC (CPX-62) installed on cable	Importation/ Infringement/ Remedy	D. McElroy	--	--	--	Received
CPX-104	Physical Exhibit - Gem model 406-6CSQS (blue) purchased by PPC (CPX-62) installed on cable	Importation/ Infringement/ Remedy	D. McElroy	--	--	--	Received
CPX-105	Physical Exhibit – Fei Yu model FY-039 F connector (CPX-39) installed on cable	Importation/ Infringement/ Remedy	D. McElroy	--	--	--	Received
CPX-106	Physical Exhibit – Fei Yu model FY-039B F connector (CPX-41) installed on cable	Importation/ Infringement/ Remedy	D. McElroy	--	--	--	Received
CPX-107	Physical Exhibit – Fei Yu model FY-040B F connector (CPX-42) installed on cable	Importation/ Infringement/ Remedy	D. McElroy	--	--	--	Received
CPX-108	Physical Exhibit - Additional infringers – physical sample (CablesToGo.com) (CPX-63) installed on cable	Importation/ Infringement/ Remedy	D. McElroy	--	--	--	Received
CPX-109	Physical Exhibit - Additional infringers – physical samples (Summit Source) (CPX-64) installed on cable	Importation/ Infringement/ Remedy	D. McElroy	--	--	--	Received

COMPLAINANT'S REVISED TRIAL EXHIBIT LIST

Complainant's Trial Ex. #	Exhibit Description	Purpose	Witness(es)	Document Date	Trial Bates #	Cross Reference	Received
CPX-110	Additional infringers – physical samples (Amazon) (CPX-66) installed on cable	Importation/ Infringement/ Remedy	D. McElroy	--	--	--	Received
CPX-111	Physical Exhibit - Additional infringers – physical samples (Ariza Technology) (CPX-68) installed on cable	Importation/ Infringement/ Remedy	D. McElroy	--	--	--	Received
CPX-112	Physical Exhibit - Additional infringers – physical samples (cablesnmore.com) (CPX-73) installed on cable	Importation/ Infringement/ Remedy	D. McElroy	--	--	--	Received
CPX-113	Physical Exhibit - Additional infringers – physical samples (Cable Wholesale) (CPX-74) (ASF20007) installed on cable	Importation/ Infringement/ Remedy	D. McElroy	--	--	--	Received
CPX-114	Physical Exhibit - Additional infringers – physical samples (MCM Electronics) (CPX-76) installed on cable	Importation/ Infringement/ Remedy	D. McElroy	--	--	--	Received
CPX-115	Physical Exhibit - Additional infringers – physical samples (Action Electronics) (CPX-78) installed on cable	Importation/ Infringement/ Remedy	D. McElroy	--	--	--	Received
CPX-116	Physical Exhibit – Separated connector (Tessco) (CPX-79)	Importation/ Infringement/ Remedy	D. McElroy	--	--	--	Received
CPX-117	Physical Exhibit - Additional infringers – physical samples (Tessco) (CPX-79) installed on cable	Importation/ Infringement/ Remedy	D. McElroy	--	--	--	Received
CPX-118	Physical Exhibit - Additional infringers – physical samples (monoprice.com - 2976) (CPX-80) installed on cable	Importation/ Infringement/ Remedy	D. McElroy	--	--	--	Received

COMPLAINANT'S REVISED TRIAL EXHIBIT LIST

Complainant's Trial Ex. #	Exhibit Description	Purpose	Witness(es)	Document Date	Trial Bates #	Cross Reference	Received
CPX-119	Physical Exhibit - Additional infringers – physical samples (monoprice.com - 2973) (CPX-81) installed on cable	Importation/ Infringement/ Remedy	D. McElroy	--	--	--	Received
CPX-120	Physical Exhibit - Additional infringers – physical samples (monoprice.com - 2978) (CPX-82) installed on cable	Importation/ Infringement/ Remedy	D. McElroy	--	--	--	Received
CPX-121	Physical Exhibit - Additional infringers – physical samples (computercablestore.com) (CPX-84) installed on cable	Importation/ Infringement/ Remedy	D. McElroy	--	--	--	Received
CPX-122	Physical Exhibit - Additional infringers – physical samples (Zhejiang Cixi Winshow Equip. Co.. Ltd. – FT018) (CPX-87) installed on cable	Importation/ Infringement/ Remedy	D. McElroy	--	--	--	Received
CPX-123	Physical Exhibit - Additional infringers – physical samples (Zhejiang Cixi Winshow Equip. Co., Ltd. – FT019) (CPX-88) installed on cable	Importation/ Infringement/ Remedy	D. McElroy	--	--	--	Received
CPX-124	Physical Exhibit - Additional infringers – physical samples (Hangzhou Prevail Optoelectronic Equip. Co., Ltd.) (CPX-90) (WL055) installed on cable	Importation/ Infringement/ Remedy	D. McElroy	--	--	--	Received
CPX-125	Physical Exhibit - Additional infringers – physical samples (Hangzhou Prevail Optoelectronic Equip. Co., Ltd.) (CPX-90) (WL050) installed on cable	Importation/ Infringement/ Remedy	D. McElroy	--	--	--	Received
CPX-126	Physical Exhibit – Additional infringers – Yilian physical samples	Importation/ Infringement/ Remedy	B. Noll	--	--	--	Received

UNITED STATES INTERNATIONAL TRADE COMMISSION
WASHINGTON, DC

Before The Honorable E. James Gildea

IN THE MATTER OF

CERTAIN COAXIAL CABLE CONNECTORS AND COMPONENTS THEREOF AND PRODUCTS CONTAINING SAME

Investigation No. 337-TA-650

RESPONDENTS FU CHING TECHNICAL INDUSTRY CO. LTD.'S AND GEM ELECTRONICS, INC.'S FINAL JOINT PRE-HEARING EXHIBIT LIST

Pre-Hearing Exhibit No.	Status - Received into Evidence	Description	Date	Bates #	Cross Reference	Witness	Purpose
JX-1	Admitted	Certified copy of U.S. Patent No. 5,470,257.	04/05/06		Compl. Ex. 2	Self Authenticating	Domestic Industry/ Non-infringement/ Invalidity
JX-2	Admitted	Prosecution History of the '257 Patent.			Compl. App. B	Self Authenticating	Domestic Non-infringement/ Invalidity
JX-3	Rejected	Declaration / Expert Report of Tim Osswald, Ph.D.	02/26/09			T. Osswald	Non-infringement
JX-4	Rejected	Summary Judgment Order / Claim Construction – *PPC v. Thomas & Betts, Corp.* (S.D. Fla.), Docket No. 77.	03/14/02			Self Authenticating	Non-infringement/ *In Pari Delicto*/ Unclean Hands/ Estoppel
JX-5C	Admitted	Letter to B. Pitcher from S. Malak.	08/30/04	PPC/ITC007835 – 007837		B. Pitcher/ S. Malak/ J. Muldoon	Acquiescence/ Waiver/ *In Pari Delicto*/ Unclean Hands/ Patent Misuse/ Relief Not In Public Interest/ Prosecution History Laches/ Laches
JX-6C	Withdrawn	Memo to M. Chen from J. Stahl.	04/22/04	FC 000002		J. Hsia/ Y. Hsia	Acquiescence/ Waiver/ *In Pari Delicto*/ Unclean Hands/ Patent Misuse/ Relief Not In Public Interest/ Prosecution History Laches/ Laches
JX-7C	Admitted	Letter to J. Muldoon from J. Hong.	06/04/04	FC 000004 – FC 000005		J. Hsia/ Y. Hsia/ J. Muldoon	Acquiescence/ Waiver/ *In Pari Delicto*/ Unclean Hands/ Patent Misuse/ Relief Not In Public Interest/ Prosecution History Laches/ Laches
JX-8C	Admitted	Fu Ching Plant Inspection Video.	12/09/08			Self Authenticating	Non-infringement

Pre-Hearing Exhibit No.	Status - Received into Evidence	Description	Date	Bates #	Cross Reference	Witness	Purpose
RX-1	Rejected	U.S. Patent No. 5,131,864 (Van Zeelst et al.).		GEM 006498 – 6503		Self Authenticating	Non-infringement/ Invalidity
RX-2	Rejected	U.S. Patent No. 4,225,162 (Dola).		GEM 000032 – 39		Self Authenticating	Non-infringement/ Invalidity
RX-3	Rejected	Complaint for Patent Infringement, *John Mezzalingua Assocs., Inc. d/b/a PPC v. Thomas & Betts Corp.*, Case No. 01-6752-CIV-GOLD (hereinafter referred to as *Thomas & Betts*), Doc. No. 1.	05/07/01			Self Authenticating	Non-infringement
RX-4	Rejected	Answer and Counterclaims of Defendant Thomas & Betts Corp., *Thomas & Betts*, Doc. No. 11.	07/24/01			Self Authenticating	Non-infringement
RX-5	Rejected	Defendant Thomas & Betts Corporation's Motion for Summary Judgment of Non-Infringement of U.S. Patent Nos. 5,470,257 and 5,632,651 and for Sanctions, *Thomas & Betts*, Doc. No. 29.	09/21/01			Self Authenticating	Non-infringement
RX-6	Rejected	Memorandum in Support of Defendant Thomas & Betts Corporation's Motion for Summary Judgment of Non-Infringement of U.S. Patent Nos. 5,470,257 and 5,632,651 and for Sanctions, *Thomas & Betts*, Doc. No. 30.	09/21/01			Self Authenticating	Non-infringement
RX-7	Rejected	Local Rule 7.5 Statement of Facts in Support of T&B's Motion for Summary Judgment of Non-Infringement of U.S. Patent Nos. 5,470,257 and 5,632,651 and for Sanctions, *Thomas & Betts*, Doc. No. 31.	09/21/01			Self Authenticating	Non-infringement
RX-8	Rejected	Defendant's Appendix in Support of Its Motion for Summary Judgment, *Thomas & Betts*, Doc. No. 32.	09/21/01			Self Authenticating	Non-infringement
RX-9	Rejected	Plaintiff's Memorandum in Opposition to Defendant's Motion for Summary Judgment and for Sanctions, *Thomas & Betts*, Doc. No. 54.	11/09/01			Self Authenticating	Non-infringement
RX-10	Rejected	Plaintiff's Appendix in Opposition to Defendant's Motion for Summary Judgment and for Sanctions, *Thomas & Betts*, Doc. No. 55.	11/09/01			Self Authenticating	Non-infringement

Pre-Hearing Exhibit No.	Status - Received into Evidence	Description	Date	Bates #	Cross Reference	Witness	Purpose
RX-11	Rejected	Plaintiff's Local Rule 7.5 Statement of Material Facts as to Which There Exists a Genuine Issue to be Tried, *Thomas & Betts*, Doc. No. 56.	11/09/01			Self Authenticating	Non-infringement
RX-12	Rejected	Defendant Thomas & Betts Corporation's Reply to Plaintiff's Local Rule 7.5 Statement, *Thomas & Betts*, Doc. No. 64.	12/10/01			Self Authenticating	Non-infringement
RX-13	Rejected	Defendant's Reply Memorandum in Support of Its Motion for Summary Judgment of Non-Infringement of U.S. Patent Nos. 5,470,257 and 5,632,651 and for Sanctions, *Thomas & Betts*, Doc. No. 65.	12/10/01			Self Authenticating	Non-infringement
RX-14	Rejected	Defendant's Appendix in Support of Its Reply Memorandum, *Thomas & Betts*, Doc. No. 66.	12/10/01			Self Authenticating	Non-infringement
RX-15	Rejected	Brief of Appellant, *John Mezzalingua Assocs., Inc. d/b/a PPC v. Thomas & Betts Corp.*, No. 02-1330, United States Court of Appeals, Federal Circuit ("*PPC Appeal*"), 2002 WL 32620165.	06/25/02			Self Authenticating	Non-infringement
RX-16	Rejected	Response Brief of Defendant-Appellee Thomas & Betts Corporation, *PPC Appeal*, 2002 WL 32712444.	08/21/02			Self Authenticating	Non-infringement
RX-17	Rejected	Reply Brief of Appellant, *PPC Appeal*, 2002 WL 32620164.	09/16/02			Self Authenticating	Non-infringement
RX-18	Rejected	Notice of Entry of Judgment Without Opinion, U.S. Court of Appeals for the Federal Circuit, *Thomas & Betts*, Doc. No. 112.	02/05/03			Self Authenticating	Non-infringement
RX-19C	Withdrawn	Letter to B. Pitcher from S. Malak.	08/30/04	GEM 001167 – 1168		B. Pitcher/ S. Malak/ B. O'Neil	Acquiescence/ Waiver/ *In Pari Delicto*/ Unclean Hands/ Patent Misuse/ Relief Not In Public Interest/ Prosecution History Laches/ Laches
RX-20C	Withdrawn	Letter to S. Malak from A. Schaier.	09/15/04	GEM 001166		B. Pitcher/ S. Malak/ B. O'Neil	Acquiescence/ Waiver/ *In Pari Delicto*/ Unclean Hands/ Patent Misuse/ Relief Not In Public Interest/ Prosecution History Laches/ Laches
RX-21C	Withdrawn	Letter to A. Schaier from S. Malak.	10/12/04	GEM 001165		B. Pitcher/ S. Malak/ B. O'Neil	Acquiescence/ Waiver/ *In Pari Delicto*/ Unclean Hands/ Patent Misuse/ Relief Not In Public Interest/ Prosecution History Laches/ Laches

Pre-Hearing Exhibit No.	Status - Received into Evidence	Description	Date	Bates #	Cross Reference	Witness	Purpose
RX-22C	Withdrawn	Letter to S. Malak from A. Schaier.	10/25/04	GEM 001162 – GEM 001164		B. Pitcher/ S. Malak/ B. O'Neil	Acquiescence/ Waiver/ *In Pari Delicto*/ Unclean Hands/ Patent Misuse/ Relief Not In Public Interest/ Prosecution History Laches/ Laches
RX-23C	Withdrawn	Letter to S. Malak from A. Schaier dated November 1, 2004.		GEM 001157 – GEM 001161		B. Pitcher/ S. Malak/ B. O'Neil	Acquiescence/ Waiver/ *In Pari Delicto*/ Unclean Hands/ Patent Misuse/ Relief Not In Public Interest/ Prosecution History Laches/ Laches
RX-24C	Withdrawn	Letter to A. Schaier from J. Muldoon.	11/11/04	GEM 001155 – GEM 001156		J. Muldoon/ B. Pitcher/ B. O'Neil	Acquiescence/ Waiver/ *In Pari Delicto*/ Unclean Hands/ Patent Misuse/ Relief Not In Public Interest/ Prosecution History Laches/ Laches
RX-25C	Withdrawn	Letter to J. Muldoon from A. Schaier.	12/10/04	GEM 001152 – GEM 001154		J. Muldoon/ B. Pitcher/ B. O'Neil	Acquiescence/ Waiver/ *In Pari Delicto*/ Unclean Hands/ Patent Misuse/ Relief Not In Public Interest/ Prosecution History Laches/ Laches
RX-26C	Withdrawn	Letter to A. Schaier from J. Muldoon.	01/11/05	GEM 001150 – 001151		J. Muldoon/ B. Pitcher/ B. O'Neil	Acquiescence/ Waiver/ *In Pari Delicto*/ Unclean Hands/ Patent Misuse/ Relief Not In Public Interest/ Prosecution History Laches/ Laches
RX-27C	Withdrawn	Letter to J. Muldoon from A. Schaier.	03/29/05	GEM 001147 – 001149		J. Muldoon/ B. Pitcher/ B. O'Neil	Acquiescence/ Waiver/ *In Pari Delicto*/ Unclean Hands/ Patent Misuse/ Relief Not In Public Interest/ Prosecution History Laches/ Laches
RX-28C	Withdrawn	Letter to R. Andrews from S. Malak.	03/28/04	FC 000281 – FC 000282		J. Hsia/ Y. Hsia/ S. Malak	Acquiescence/ Waiver/ *In Pari Delicto*/ Unclean Hands/ Patent Misuse/ Relief Not In Public Interest/ Prosecution History Laches/ Laches
RX-29C	Withdrawn	Letter to RP Electronics Co., Ltd. from R. Huang.	04/01/04	FC 000003		J. Hsia/ Y. Hsia	Acquiescence/ Waiver/ *In Pari Delicto*/ Unclean Hands/ Patent Misuse/ Relief Not In Public Interest/ Prosecution History Laches/ Laches
RX-30C	Withdrawn	Memo in reply on behalf of Fu Ching Technical Industry Co., Ltd. from R. Huang.	04/01/04	FC 000019		J. Hsia/ Y. Hsia	Acquiescence/ Waiver/ *In Pari Delicto*/ Unclean Hands/ Patent Misuse/ Relief Not In Public Interest/ Prosecution History Laches/ Laches
RX-31C	Withdrawn	Memo to M. Chen from J. Stahl.	04/06/04	FC 000001		J. Hsia/ Y. Hsia	Acquiescence/ Waiver/ *In Pari Delicto*/ Unclean Hands/ Patent Misuse/ Relief Not In Public Interest/ Prosecution History Laches/ Laches

Pre-Hearing Exhibit No.	Status - Received into Evidence	Description	Date	Bates #	Cross Reference	Witness	Purpose
RX-32C	Withdrawn	Letter to A. Stark from J. Muldoon.	04/09/04	FC 000007 – FC 000008		J. Muldoon/ J. Hsia/ Y. Hsia	Acquiescence/ Waiver/ *In Pari Delicto*/ Unclean Hands/ Patent Misuse/ Relief Not In Public Interest/ Prosecution History Laches/ Laches
RX-33C	Withdrawn	Letter to J. Muldoon from J. Hong.	06/07/04	FC 000020 – FC 000021		J. Hsia/ Y. Hsia/ J. Muldoon	Acquiescence/ Waiver/ *In Pari Delicto*/ Unclean Hands/ Patent Misuse/ Relief Not In Public Interest/ Prosecution History Laches/ Laches
RX-34C	Withdrawn	Letter to B. Pitcher from S. Malak.	08/30/04	FC 000009 – FC 000015		J. Hsia/ Y. Hsia/ B. Pitcher/ S. Malak	Acquiescence/ Waiver/ *In Pari Delicto*/ Unclean Hands/ Patent Misuse/ Relief Not In Public Interest/ Prosecution History Laches/ Laches
RX-35C	Withdrawn	Letter to A. Schaier from J. Muldoon	11/11/04	FC 000017 – FC 000018		J. Hsia/ Y. Hsia/ J. Muldoon	Acquiescence/ Waiver/ *In Pari Delicto*/ Unclean Hands/ Patent Misuse/ Relief Not In Public Interest/ Prosecution History Laches/ Laches
RX-36C	Admitted	Letter to President of Fu Ching Technical Industry Co. from S. Malak.	12/08/04	FC 000022 – FC 000025		S. Malak/ J. Hsia/ Y. Hsia	Acquiescence/ Waiver/ *In Pari Delicto*/ Unclean Hands/ Patent Misuse/ Relief Not In Public Interest/ Prosecution History Laches/ Laches
RX-37C	Withdrawn	Letter to S. Malak from J. Hsia with express mail service receipt.	12/21/04	FC 000026 – FC 000027		S. Malak/ J. Hsia/ Y. Hsia	Acquiescence/ Waiver/ *In Pari Delicto*/ Unclean Hands/ Patent Misuse/ Relief Not In Public Interest/ Prosecution History Laches/ Laches
RX-38C	Admitted	Letter to S. Malak from J. Hsia with registered mail receipt.	12/21/04	FC 000028 – FC 000029		S. Malak/ J. Hsia/ Y. Hsia	Acquiescence/ Waiver/ *In Pari Delicto*/ Unclean Hands/ Patent Misuse/ Relief Not In Public Interest/ Prosecution History Laches/ Laches
RX-39C	Admitted	DVD Excerpt # 1 from Videotaped Deposition of Stephen J. Skeels, Oct. 3, 2008.	10/03/08		Ex. 9 to Statement of Material Facts in Support of Respondents' Joint Motion for Summary Determination	Self Authenticating	Invalidity/ Non-infringement/ Unclean Hands/ *In Pari Dilecto*
RX-40C	Admitted	DVD Excerpt # 2 from Videotaped Deposition of Stephen J. Skeels, Oct. 3, 2008.	10/03/08		Ex. 9 to Statement of Material Facts in Support of Respondents' Joint Motion for Summary Determination	Self Authenticating	Invalidity/ Non-infringement/ Unclean Hands/ *In Pari Dilecto*

Pre-Hearing Exhibit No.	Status - Received into Evidence	Description	Date	Bates #	Cross Reference	Witness	Purpose
RX-41	Rejected	Subpoena Duces Tecum to ADI, Corporate Headquarters, 263 Old Country Road, Melville, NY 11747, served by Complainant, John Mezzalingua Assocs., Inc., d/b/a PPC, Inc.	01/06/09			Self Authenticating	Unclean Hands/ *In Pari Dilecto*/ Patent Misuse/ Relief Not In Public Interest
RX-42	Rejected	Subpoena Duces Ad Testificandum to ADI, Corporate Headquarters, 263 Old Country Road, Melville, NY 11747, served by Complainant, John Mezzalingua Assocs., Inc., d/b/a PPC, Inc.	01/06/09			Self Authenticating	Unclean Hands/ *In Pari Dilecto*/ Patent Misuse/ Relief Not In Public Interest
RX-43	Withdrawn	Complainant's Privilege Log.				Self Authenticating	Non-infringement/ Acquiescence/ Waiver/ *In Pari Delicto*/ Unclean Hands/ Patent Misuse/ Relief Not In Public Interest/ Prosecution History Laches/ Laches
RX-44C	Withdrawn	Complainant's Supplemental Response to Respondents Gem Electronics, Inc.'s and Fu Ching Industrial Co. Interrogatory No. 45.	04/13/09			Self Authenticating	Non-infringement/ Acquiescence/ Waiver/ *In Pari Delicto*/ Unclean Hands/ Patent Misuse/ Relief Not In Public Interest/ Prosecution History Laches/ Laches
RX-45C	Rejected	Complainant's Responses and Objections to Respondent Gem Electronics, Inc.'s Fourth Set of Interrogatories.	02/2/09			Self Authenticating	Non-infringement/ Acquiescence/ Waiver/ *In Pari Delicto*/ Unclean Hands/ Patent Misuse/ Relief Not In Public Interest/ Prosecution History Laches/ Laches
RX-46C	Admitted	Complainant's Supplemental Responses and Objections to Respondent Gem Electronics, Inc.'s Third Set of Interrogatories., Nos. 41 & 42	02/04/09			Self Authenticating	Non-infringement/ Acquiescence/ Waiver/ *In Pari Delicto*/ Unclean Hands/ Patent Misuse/ Relief Not In Public Interest/ Prosecution History Laches/ Laches
RX-47C	Withdrawn	Complainant's Consolidated Responses and Objections to Respondent Gem Electronics and Respondent Fu Ching Technical Industry Co. Ltd. First Sets of Interrogatories.	09/25/08			Self Authenticating	Non-infringement/ Invalidity/ Estoppel/ Acquiescence/ Waiver/ *In Pari Delicto*/ Unclean Hands/ Patent Misuse/ Relief Not In Public Interest/ Prosecution History Laches/ Laches
RX-48C	Admitted	Complainant's Answers and Objections to Respondents', Gem Electronics, Inc. and Fu Ching Technical Industry Co. Ltd. Joint First Set of Requests for Admission, No. 1 only.	02/02/09			Self Authenticating	Non-infringement
RX-49	Withdrawn	Photographs of accused products taken by PPC.	02/02/09	PPC/ITC01 4494 – 014607		J. Muldoon/ N. Montena/ B. O'Neil/ B. Pitcher/ J. Hsia	Non-infringement.

Pre-Hearing Exhibit No.	Status - Received into Evidence	Description	Date	Bates #	Cross Reference	Witness	Purpose
RX-50C	Withdrawn	Letter to M. Yap from S. Malak.	10/03/01	PPC/ITC00 7066 – 007067		S. Malak/ J. Hsia	Acquiescence/ Waiver/ *In Pari Delicto*/ Unclean Hands/ Patent Misuse/ Relief Not In Public Interest/ Prosecution History Laches/ Laches
RX-51C	Withdrawn	Letter to M. Yap from S. Malak (1st pg.).	10/03/01	PPC/ITC00 7068		S. Malak/ J. Hsia	Acquiescence/ Waiver/ *In Pari Delicto*/ Unclean Hands/ Patent Misuse/ Relief Not In Public Interest/ Prosecution History Laches/ Laches
RX-52C	Withdrawn	Letter to S. Malak from Y.H. Shih.	10/30/01	PPC/ITC00 7065		S. Malak/ J. Hsia	Acquiescence/ Waiver/ *In Pari Delicto*/ Unclean Hands/ Patent Misuse/ Relief Not In Public Interest/ Prosecution History Laches/ Laches
RX-53C	Withdrawn	Letter to S. Malak from Y.H. Shih.	10/30/01	PPC/ITC00 7064		S. Malak/ J. Hsia	Acquiescence/ Waiver/ *In Pari Delicto*/ Unclean Hands/ Patent Misuse/ Relief Not In Public Interest/ Prosecution History Laches/ Laches
RX-54C	Withdrawn	Letter to Y.H. Shih from S. Malak.	11/12/01	PPC/ITC00 7060		S. Malak/ J. Hsia	Acquiescence/ Waiver/ *In Pari Delicto*/ Unclean Hands/ Patent Misuse/ Relief Not In Public Interest/ Prosecution History Laches/ Laches
RX-55C	Withdrawn	Letter to Y.H. Shih from S. Malak.	11/12/01	PPC/ITC00 7061		S. Malak/ J. Hsia	Acquiescence/ Waiver/ *In Pari Delicto*/ Unclean Hands/ Patent Misuse/ Relief Not In Public Interest/ Prosecution History Laches/ Laches
RX-56C	Withdrawn	Letter to Y.H. Shih from S. Malak.	11/12/01	PPC/ITC00 7062		S. Malak/ J. Hsia	Acquiescence/ Waiver/ *In Pari Delicto*/ Unclean Hands/ Patent Misuse/ Relief Not In Public Interest/ Prosecution History Laches/ Laches
RX-57C	Withdrawn	Letter to Y.H. Shih from S. Malak.	11/12/01	PPC/ITC00 7063		S. Malak/ J. Hsia	Acquiescence/ Waiver/ *In Pari Delicto*/ Unclean Hands/ Patent Misuse/ Relief Not In Public Interest/ Prosecution History Laches/ Laches
RX-58C	Withdrawn	Letter to S. Malak from Y.H. Shih.	11/27/01	PPC/ITC00 7053		S. Malak/ J. Hsia	Acquiescence/ Waiver/ *In Pari Delicto*/ Unclean Hands/ Patent Misuse/ Relief Not In Public Interest/ Prosecution History Laches/ Laches
RX-59C	Withdrawn	Letter to S. Malak from Y.H. Shih.	11/27/01	PPC/ITC00 7127		S. Malak/ J. Hsia	Acquiescence/ Waiver/ *In Pari Delicto*/ Unclean Hands/ Patent Misuse/ Relief Not In Public Interest/ Prosecution History Laches/ Laches
RX-60C	Withdrawn	E-Mail to S. Malak, R. Connor, J. Mezzalingua and S. Langham from N. Montena.	12/21/01	PPC/ITC00 7059		S. Malak/ N. Montena	Acquiescence/ Waiver/ *In Pari Delicto*/ Unclean Hands/ Patent Misuse/ Relief Not In Public Interest/ Prosecution History Laches/ Laches
RX-61C	Withdrawn	Letter to S. Malak from Y.H. Shih.	01/23/02	PPC/ITC00		S. Malak/ J.	Acquiescence/ Waiver/ *In Pari Delicto*/ Unclean

Pre-Hearing Exhibit No.	Status - Received into Evidence	Description	Date	Bates #	Cross Reference	Witness	Purpose
				7054 – 007055		Hsia	Hands/ Patent Misuse/ Relief Not In Public Interest/ Prosecution History Laches/ Laches
RX-62C	Withdrawn	Letter to Y.H. Shih from S. Malak.	01/23/02	PPC/ITC00 7056		S. Malak/ J. Hsia	Acquiescence/ Waiver/ *In Pari Delicto*/ Unclean Hands/ Patent Misuse/ Relief Not In Public Interest/ Prosecution History Laches/ Laches
RX-63C	Withdrawn	Letter to Y.H. Shih from S. Malak.	01/23/02	PPC/ITC00 7057 – 007058		S. Malak/ J. Hsia	Acquiescence/ Waiver/ *In Pari Delicto*/ Unclean Hands/ Patent Misuse/ Relief Not In Public Interest/ Prosecution History Laches/ Laches
RX-64C	Withdrawn	Letter to Y.H. Shih from S. Malak.	01/30/02	PPC/ITC00 7052		S. Malak/ J. Hsia	Acquiescence/ Waiver/ *In Pari Delicto*/ Unclean Hands/ Patent Misuse/ Relief Not In Public Interest/ Prosecution History Laches/ Laches
RX-65C	Withdrawn	Letter to S. Malak from Y. H. Shih.	02/01/02	PPC/ITC00 7051		S. Malak/ J. Hsia	Acquiescence/ Waiver/ *In Pari Delicto*/ Unclean Hands/ Patent Misuse/ Relief Not In Public Interest/ Prosecution History Laches/ Laches
RX-66C	Withdrawn	Letter to Y.H. Shih from S. Malak.	02/08/02	PPC/ITC00 7048		S. Malak/ J. Hsia	Acquiescence/ Waiver/ *In Pari Delicto*/ Unclean Hands/ Patent Misuse/ Relief Not In Public Interest/ Prosecution History Laches/ Laches
RX-67C	Withdrawn	Letter to S. Malak from Y.H. Shih.	02/08/02	PPC/ITC00 7049		S. Malak/ J. Hsia	Acquiescence/ Waiver/ *In Pari Delicto*/ Unclean Hands/ Patent Misuse/ Relief Not In Public Interest/ Prosecution History Laches/ Laches
RX-68C	Withdrawn	Letter to S. Malak from Y. H. Shih.	02/11/02	PPC/ITC00 7050		S. Malak/ J. Hsia	Acquiescence/ Waiver/ *In Pari Delicto*/ Unclean Hands/ Patent Misuse/ Relief Not In Public Interest/ Prosecution History Laches/ Laches
RX-69C	Withdrawn	Letter to S. Malak from Y.H. Shih.	02/20/02	PPC/ITC00 7047		S. Malak/ J. Hsia	Acquiescence/ Waiver/ *In Pari Delicto*/ Unclean Hands/ Patent Misuse/ Relief Not In Public Interest/ Prosecution History Laches/ Laches
RX-70C	Withdrawn	Letter to Y.H. Shih from S. Malak.	03/05/02	PPC/ITC00 7046		S. Malak/ J. Hsia	Acquiescence/ Waiver/ *In Pari Delicto*/ Unclean Hands/ Patent Misuse/ Relief Not In Public Interest/ Prosecution History Laches/ Laches
RX-71C	Admitted	Color photographs of the locking members of the accused products.			Ex. A to Declaration of William E. Pitcher in Support of Respondents' Joint Motion for	B. Pitcher/ B. O'Neil/ J. Hsia	Non-infringement

Pre-Hearing Exhibit No.	Status - Received into Evidence	Description	Date	Bates #	Cross Reference	Witness	Purpose
					Summary Determination		
RX-72C	Admitted	Excerpts from Merriam Webster's Collegiate Dictionary, Tenth Edition (1993); The American Heritage College Dictionary, Third Edition (2000); and Webster's II New College Dictionary, Third Edition (2005)			Exs. 15, 16 and 17 to Statement of Material Facts in Support of Respondents' Joint Motion for Summary Determination	Self Authenticating	Non-infringement
RX-73C	Admitted	Fu Ching Component Drawing of Locking Member.		FC 004340		J. Hsia/ Y. Hsia/ B. O'Neil/ B. Pitcher	Non-infringement
RX-74C	Admitted	Fu Ching Component Drawing of Connector Body.		FC 004344		J. Hsia/ Y. Hsia/ B. O'Neil/ B. Pitcher	Non-infringement
RX-75C	Admitted	Letter to S. Malak from A. Schaier.	09/15/04	PPC/ITC00 7834		S. Malak/ J. Muldoon/ R. Haube	Acquiescence/ Waiver/ *In Pari Delicto*/ Unclean Hands/ Patent Misuse/ Relief Not In Public Interest/ Prosecution History Laches/ Laches
RX-76C	Admitted	Letter to A. Shaier from S. Malak.	10/12/04	PPC/ITC00 7832		S. Malak/ J. Muldoon/ R. Haube	Acquiescence/ Waiver/ *In Pari Delicto*/ Unclean Hands/ Patent Misuse/ Relief Not In Public Interest/ Prosecution History Laches/ Laches
RX-77C	Admitted	Letter to S. Malak from A. Schaier.	10/25/04	PPC/ITC00 7833		S. Malak/ J. Muldoon/ R. Haube	Acquiescence/ Waiver/ *In Pari Delicto*/ Unclean Hands/ Patent Misuse/ Relief Not In Public Interest/ Prosecution History Laches/ Laches
RX-78C	Admitted	Letter to S. Malak from A. Schaier.	11/01/04	PPC/ITC00 7826 – 007828		S. Malak/ J. Muldoon/ R. Haube	Acquiescence/ Waiver/ *In Pari Delicto*/ Unclean Hands/ Patent Misuse/ Relief Not In Public Interest/ Prosecution History Laches/ Laches
RX-79C	Withdrawn	Letter to S. Malak from A. Schaier.	11/01/04	PPC/ITC00 7829 – 007831		S. Malak/ J. Muldoon/ R. Haube	Acquiescence/ Waiver/ *In Pari Delicto*/ Unclean Hands/ Patent Misuse/ Relief Not In Public Interest/ Prosecution History Laches/ Laches
RX-80C	Admitted	Letter to A. Schaier from J. Muldoon with facsimile transmittal history report.	11/11/04	PPC/ITC00 7815 – 007816; 007819		S. Malak/ J. Muldoon/ R. Haube	Acquiescence/ Waiver/ *In Pari Delicto*/ Unclean Hands/ Patent Misuse/ Relief Not In Public Interest/ Prosecution History Laches/ Laches

Pre-Hearing Exhibit No.	Status - Received into Evidence	Description	Date	Bates #	Cross Reference	Witness	Purpose
RX-81C	Withdrawn	Letter to President, Fu Ching Technical Industry Co. from S. Malak.	12/08/04	PPC/ITC00 7795 – 007801		S. Malak/ J. Hsia/ Y. Hsia/ J. Muldoon/ R. Haube	Acquiescence/ Waiver/ *In Pari Delicto*/ Unclean Hands/ Patent Misuse/ Relief Not In Public Interest/ Prosecution History Laches/ Laches
RX-82C	Withdrawn	Letter to President, Fu Ching Technical Industry Co. from S. Malak.	12/08/04	PPC/ITC00 7906 – 007907		S. Malak/ J. Hsia/ Y. Hsia/ J. Muldoon/ R. Haube	Acquiescence/ Waiver/ *In Pari Delicto*/ Unclean Hands/ Patent Misuse/ Relief Not In Public Interest/ Prosecution History Laches/ Laches
RX-83C	Admitted	Letter to J. Muldoon from A. Schaier.	12/10/04	PPC/ITC00 7811		S. Malak/ J. Muldoon/ R. Haube	Acquiescence/ Waiver/ *In Pari Delicto*/ Unclean Hands/ Patent Misuse/ Relief Not In Public Interest/ Prosecution History Laches/ Laches
RX-84C	Withdrawn	Letter to J. Muldoon from A. Schaier.	12/10/04	PPC/ITC00 7812		S. Malak/ J. Muldoon/ R. Haube	Acquiescence/ Waiver/ *In Pari Delicto*/ Unclean Hands/ Patent Misuse/ Relief Not In Public Interest/ Prosecution History Laches/ Laches
RX-85C	Withdrawn	Letter to S. Malak from J. Hsia.	12/21/04	PPC/ITC00 7905		S. Malak/ J. Muldoon/ R. Haube	Acquiescence/ Waiver/ *In Pari Delicto*/ Unclean Hands/ Patent Misuse/ Relief Not In Public Interest/ Prosecution History Laches/ Laches
RX-86C	Admitted	Letter to A. Schaier from J. Muldoon.	01/11/05	PPC/ITC00 7807 – 007808		S. Malak/ J. Muldoon/ R. Haube	Acquiescence/ Waiver/ *In Pari Delicto*/ Unclean Hands/ Patent Misuse/ Relief Not In Public Interest/ Prosecution History Laches/ Laches
RX-87C	Admitted	Letter to J. Muldoon from A. Schaier.	03/29/05	PPC/ITC00 7803		S. Malak/ J. Muldoon/ R. Haube	Acquiescence/ Waiver/ *In Pari Delicto*/ Unclean Hands/ Patent Misuse/ Relief Not In Public Interest/ Prosecution History Laches/ Laches
RX-88C	Withdrawn	Letter to J. Muldoon from A. Schaier with facsimile transmission cover sheet from J. Muldoon to S. Malak of same date.	03/29/05	PPC/ITC00 7804; 007806		S. Malak/ J. Muldoon/ R. Haube	Acquiescence/ Waiver/ *In Pari Delicto*/ Unclean Hands/ Patent Misuse/ Relief Not In Public Interest/ Prosecution History Laches/ Laches
RX-89C	Withdrawn	Letter to S. Malak from J. Hsia.	12/21/04	PPC/ITC00 7905		S. Malak/ J. Hsia/ J. Muldoon/ R. Haube	Acquiescence/ Waiver/ *In Pari Delicto*/ Unclean Hands/ Patent Misuse/ Relief Not In Public Interest/ Prosecution History Laches/ Laches
RX-90C	Withdrawn	Letter to S. Malak from J. Hsia.	12/27/04	PPC/ITC00 7908		S. Malak/ J. Hsia/ J. Muldoon/ R.	Acquiescence/ Waiver/ *In Pari Delicto*/ Unclean Hands/ Patent Misuse/ Relief Not In Public Interest/ Prosecution History Laches/ Laches

Pre-Hearing Exhibit No.	Status - Received into Evidence	Description	Date	Bates #	Cross Reference	Witness	Purpose
						Haube	
RX-91C	Withdrawn	Drawing of PPC CMP Radial Compression Connector (Unlocked)		PPC/ITC00 0491		Haube/ N. Montena/ C. Eldering	Domestic Industry
RX-92C	Withdrawn	Drawing of PPC CMP Radial Compression Connector (Unlocked)		PPC/ITC00 0518		Haube/ N. Montena/ C. Eldering	Domestic Industry
RX-93C	Withdrawn	Drawing of PPC CMP Radial Compression Connector (Locked)		PPC/ITC00 0492		Haube/ N. Montena/ C. Eldering	Domestic Industry
RX-94C	Withdrawn	PPC Drawing No. CMP 6-R		PPC/ITC01 4621		Haube/ N. Montena/ C. Eldering	Domestic Industry
RX-95C	Withdrawn	PPC Drawing No. 11401-XX		PPC/ITC01 4622		Haube/ N. Montena/ C. Eldering	Domestic Industry
RX-96C	Withdrawn	PPC Drawing No. 11269-XX		PPC/ITC01 4623		Haube/ N. Montena/ C. Eldering	Domestic Industry
RX-97C	Withdrawn	PPC Drawing No. 11399-XX		PPC/ITC01 4624		Haube/ N. Montena/ C. Eldering	Domestic Industry
RX-98C	Withdrawn	PPC Drawing No. 11774-XX		PPC/ITC01 4625		Haube/ N. Montena/ C. Eldering	Domestic Industry
RX-99C	Withdrawn	PPC Drawing No. 861001-X		PPC/ITC01 4626 – 014627		Haube/ N. Montena/ C. Eldering	Domestic Industry
RX-100C	Withdrawn	PPC Drawing No. EX6XL		PPC/ITC01 4628		Haube/ N. Montena/ C. Eldering	Domestic Industry
RX-101C	Withdrawn	PPC Drawing No. 11268-XX		PPC/ITC01 4629		Haube/ N. Montena/ C. Eldering	Domestic Industry

Pre-Hearing Exhibit No.	Status - Received into Evidence	Description	Date	Bates #	Cross Reference	Witness	Purpose
RX-102C	Withdrawn	PPC Drawing No. 11269-XX		PPC/ITC01 4630		Haube/ N. Montena/ C. Eldering	Domestic Industry
RX-103C	Withdrawn	PPC Drawing No. 11413-XX		PPC/ITC01 4631 – 014632		Haube/ N. Montena/ C. Eldering	Domestic Industry
RX-104C	Withdrawn	PPC Drawing No. 11321-XX		PPC/ITC01 4633		Haube/ N. Montena/ C. Eldering	Domestic Industry
RX-105C	Withdrawn	PPC Drawing No. 861001-X		PPC/ITC01 4634 – 014635		Haube/ N. Montena/ C. Eldering	Domestic Industry
RX-106C	Withdrawn	Errata sheet and declaration to transcript of deposition of Lan Chen Hsia of November 18, 2008	03/16/09			Self-authenticating; Jessie Hsia	Rebutt CX-114C
RX-107C	Withdrawn	Errata sheet and declaration to transcript of deposition of Yu Chao Hsia of December 10, 2008	04/08/09			Self-authenticating;Yu Chao Hsia	Rebutt CX-118C
RX-108C	Withdrawn	Errata sheet and declaration to transcript of deposition of Lan Chen Hsia of December 10, 2008	03/26/09			Self-authenticating; Jessie Hsia	Rebutt CX-59C, CX-103C and CX-115C
RX-109C	Withdrawn	Errata sheet and declaration to transcript of deposition of Lan Chen Hsia of December 11, 2008	03/26/09			Self-Authenticating; Jessie Hsia	Rebutt CX-59C, CX-103C and CX-116C
RX-110C	Withdrawn	Errata sheet and declaration to transcript of deposition of Lan Chen Hsia of December 12, 2008	04/08/09			Self-authenticating; Jessie Hsia	Rebutt CX-59C, CX-103C and CX-117C
RPX-1	Admitted	Physical example of accused product F-connector used as Exhibit GFC 18 from the Videotaped Deposition of Stephen J. Skeels, Oct. 3, 2008.				Self Authenticating	Invalidity/ Non-infringement/ Unclean Hands/ *In Pari Dilecto*

Pre-Hearing Exhibit No.	Status - Received into Evidence	Description	Date	Bates #	Cross Reference	Witness	Purpose
RPX-2	Withdrawn	Physical example of accused product F-connector used as Exhibit PPC 1 from the Videotaped Deposition of Stephen J. Skeels, Oct. 3, 2008.				Self Authenticating	Invalidity/ Non-infringement/ Unclean Hands/ *In Pari Dilecto*
RPX-3	Admitted	Physical sample of F Male Connector for RG59 PVC, Siamese & Plenum Type cable (assembled).				B. O'Neil/ B. Pitcher/ J. Hsia	Non-infringement
RPX-4	Admitted	Physical sample of F Male Connector for RG6 Type cable (assembled).				B. O'Neil/ B. Pitcher/ J. Hsia	Non-infringement
RPX-5	Admitted	Physical sample of F Male Connector for RG6 Plenum Type cable (assembled).				B. O'Neil/ B. Pitcher/ J. Hsia	Non-infringement
RPX-6	Admitted	Physical sample of F Male Connector for RG6 Quad Plenum Type cable (assembled).				B. O'Neil/ B. Pitcher/ J. Hsia	Non-infringement
RPX-7	Admitted	Physical sample of F Male Connector for RG6 Dual/Tri/Quad Type cable (assembled).				B. O'Neil/ B. Pitcher/ J. Hsia	Non-infringement
RPX-8	Admitted	Physical sample of F Male Connector (Gold) for RG6 Dual/Tri/Quad Type cable (assembled).				B. O'Neil/ B. Pitcher/ J. Hsia	Non-infringement
RPX-9	Admitted	Physical sample of F Male Connector for RG11 Type cable (assembled).				B. O'Neil/ B. Pitcher/ J. Hsia	Non-infringement
RPX-10	Admitted	Physical sample of F Right Angle Male Connector for RG59 PVC, Siamese & Plenum Type cable (assembled).				B. O'Neil/ B. Pitcher/ J. Hsia	Non-infringement
RPX-11	Admitted	Physical sample of F Right Angle Male Connector for RG6 Type cable (assembled).				B. O'Neil/ B. Pitcher/ J. Hsia	Non-infringement
RPX-12	Admitted	Physical sample of F Right Angle Male Connector for RG6 Plenum Type cable (assembled).				B. O'Neil/ B. Pitcher/ J. Hsia	Non-infringement

Pre-Hearing Exhibit No.	Status - Received into Evidence	Description	Date	Bates #	Cross Reference	Witness	Purpose
RPX-13	Admitted	Physical sample of F Right Angle Male Connector for RG6 Quad Plenum Type cable (assembled).				B. O'Neil/ B. Pitcher/ J. Hsia	Non-infringement
RPX-14	Admitted	Physical sample of F Right Angle Male Connector for RG6 Dual/Tri/Quad Type cable (assembled).				B. O'Neil/ B. Pitcher/ J. Hsia	Non-infringement
RPX-15	Admitted	Physical sample of F Female Connector for RG59 PVC, Siamese & Plenum Type cable (assembled).				B. O'Neil/ B. Pitcher/ J. Hsia	Non-infringement
RPX-16	Admitted	Physical sample of F Female Connector for RG6 Type cable (assembled).				B. O'Neil/ B. Pitcher/ J. Hsia	Non-infringement
RPX-17	Admitted	Physical sample of F Female Connector for RG6 Plenum Type cable (assembled).				B. O'Neil/ B. Pitcher/ J. Hsia	Non-infringement
RPX-18	Admitted	Physical sample of F Female Connector for RG6 Quad Plenum Type cable (assembled)				B. O'Neil/ B. Pitcher/ J. Hsia	Non-infringement
RPX-19	Admitted	Physical sample of F Female Connector for RG6 Dual/Tri/Quad Type cable (assembled).				B. O'Neil/ B. Pitcher/ J. Hsia	Non-infringement
RPX-20	Admitted	Physical sample of BNC Male Connector for RG59 PVC, Siamese & Plenum Type cable (assembled).				B. O'Neil/ B. Pitcher/ J. Hsia	Non-infringement
RPX-21	Admitted	Physical sample of BNC Male Connector for RG6 Type cable (assembled).				B. O'Neil/ B. Pitcher/ J. Hsia	Non-infringement
RPX-22	Admitted	Physical sample of BNC Male Connector for RG6 Plenum Type cable (assembled).				B. O'Neil/ B. Pitcher/ J. Hsia	Non-infringement
RPX-23	Admitted	Physical sample of BNC Male Connector for RG6 Quad Plenum Type cable (assembled).				B. O'Neil/ B. Pitcher/ J. Hsia	Non-infringement
RPX-24	Admitted	Physical sample of BNC Male Connector for RG6				B. O'Neil/ B.	Non-infringement

Pre-Hearing Exhibit No.	Status - Received into Evidence	Description	Date	Bates #	Cross Reference	Witness	Purpose
		Dual/Tri/Quad Type cable (assembled).				Pitcher/ J. Hsia	
RPX-25	Admitted	Physical sample of BNC Male Connector (Gold) for RG6 Dual/Tri/Quad Type cable (assembled).				B. O'Neil/ B. Pitcher/ J. Hsia	Non-infringement
RPX-26	Admitted	Physical sample of BNC Male Connector for RG58 Type cable, Belden 8240 (assembled).				B. O'Neil/ B. Pitcher/ J. Hsia	Non-infringement
RPX-27	Admitted	Physical sample of BNC Male Connector for RG59 Type cable , 23 AWG, Beldon 8241 (assembled).				B. O'Neil/ B. Pitcher/ J. Hsia	Non-infringement
RPX-28	Admitted	Physical sample of BNC Right Angle Male Connector for RG59 PVC, Siamese & Plenum Type cable (assembled).				B. O'Neil/ B. Pitcher/ J. Hsia	Non-infringement
RPX-29	Admitted	Physical sample of BNC Right Angle Male Connector for RG6 Type cable (assembled).				B. O'Neil/ B. Pitcher/ J. Hsia	Non-infringement
RPX-30	Admitted	Physical sample of BNC Right Angle Male Connector for RG6 Plenum Type cable (assembled).				B. O'Neil/ B. Pitcher/ J. Hsia	Non-infringement
RPX-31	Admitted	Physical sample of BNC Right Angle Male Connector for RG6 Quad Plenum Type cable (assembled).				B. O'Neil/ B. Pitcher/ J. Hsia	Non-infringement
RPX-32	Admitted	Physical sample of BNC Right Angle Male Connector for RG6 Dual/Tri/Quad Type cable (assembled).				B. O'Neil/ B. Pitcher/ J. Hsia	Non-infringement
RPX-33	Admitted	Physical sample of BNC Female Connector for RG59 PVC, Siamese & Plenum Type cable (assembled).				B. O'Neil/ B. Pitcher/ J. Hsia	Non-infringement
RPX-34	Admitted	Physical sample of BNC Female Connector for RG6 Type cable (assembled).				B. O'Neil/ B. Pitcher/ J. Hsia	Non-infringement
RPX-35	Admitted	Physical sample of BNC Female Connector for RG6 Plenum Type cable (assembled).				B. O'Neil/ B. Pitcher/ J.	Non-infringement

Pre-Hearing Exhibit No.	Status - Received into Evidence	Description	Date	Bates #	Cross Reference	Witness	Purpose
						Hsia	
RPX-36	Admitted	Physical sample of BNC Female Connector for RG6 Quad Plenum Type cable (assembled).				B. O'Neil/ B. Pitcher/ J. Hsia	Non-infringement
RPX-37	Admitted	Physical sample of BNC Female Connector for RG6 Type cable (assembled).				B. O'Neil/ B. Pitcher/ J. Hsia	Non-infringement
RPX-38	Admitted	Physical sample of RCA Male Connector for RG59 PVC, Siamese & Plenum Type cable (assembled).				B. O'Neil/ B. Pitcher/ J. Hsia	Non-infringement
RPX-39	Admitted	Physical sample of RCA Male Connector for RG6 Type cable (assembled).				B. O'Neil/ B. Pitcher/ J. Hsia	Non-infringement
RPX-40	Admitted	Physical sample of RCA Male Connector for RG6 Plenum Type cable (assembled).				B. O'Neil/ B. Pitcher/ J. Hsia	Non-infringement
RPX-41	Admitted	Physical sample of RCA Male Connector for RG6 Quad Plenum Type cable (assembled).				B. O'Neil/ B. Pitcher/ J. Hsia	Non-infringement
RPX-42	Admitted	Physical sample of RCA Male Connector for RG6 Dual/Tri/Quad Type cable (assembled).				B. O'Neil/ B. Pitcher/ J. Hsia	Non-infringement
RPX-43	Admitted	Physical sample of RCA Male Connector (Gold) for RG6 Dual/Tri/Quad Type cable (assembled).				B. O'Neil/ B. Pitcher/ J. Hsia	Non-infringement
RPX-44	Admitted	Physical sample of RCA Right Angle Male Connector for RG59 PVC, Siamese & Plenum Type cable (assembled).				B. O'Neil/ B. Pitcher/ J. Hsia	Non-infringement
RPX-45	Admitted	Physical sample of RCA Right Angle Male Connector for RG6 Type cable (assembled).				B. O'Neil/ B. Pitcher/ J. Hsia	Non-infringement
RPX-46	Admitted	Physical sample of RCA Right Angle Male Connector for RG6 Plenum Type cable (assembled).				B. O'Neil/ B. Pitcher/ J. Hsia	Non-infringement

Pre-Hearing Exhibit No.	Status - Received into Evidence	Description	Date	Bates #	Cross Reference	Witness	Purpose
RPX-47	Admitted	Physical sample of RCA Right Angle Male Connector for RG6 Quad Plenum Type cable (assembled).				B. O'Neil/ B. Pitcher/ J. Hsia	Non-infringement
RPX-48	Admitted	Physical sample of RCA Right Angle Male Connector for RG6 Dual/Tri/Quad Type cable (assembled).				B. O'Neil/ B. Pitcher/ J. Hsia	Non-infringement
RPX-49	Admitted	Physical sample of RCA Female Connector for RG59 PVC, Siamese & Plenum Type cable (assembled).				B. O'Neil/ B. Pitcher/ J. Hsia	Non-infringement
RPX-50	Admitted	Physical sample of RCA Female Connector for RG6 Type cable (assembled).				B. O'Neil/ B. Pitcher/ J. Hsia	Non-infringement
RPX-51	Admitted	Physical sample of RCA Female Connector for RG6 Plenum Type cable (assembled).				B. O'Neil/ B. Pitcher/ J. Hsia	Non-infringement
RPX-52	Admitted	Physical sample of RCA Female Connector for RG6 Quad Plenum Type cable (assembled).				B. O'Neil/ B. Pitcher/ J. Hsia	Non-infringement
RPX-53	Admitted	Physical sample of RCA Female Connector for RG6 Dual/Tri/Quad Type cable (assembled).				B. O'Neil/ B. Pitcher/ J. Hsia	Non-infringement
RPX-54	Admitted	Physical sample of F Male Connector for RG59 PVC, Siamese & Plenum Type cable (unassembled).				B. O'Neil/ B. Pitcher/ J. Hsia	Non-infringement
RPX-55	Admitted	Physical sample of F Male Connector for RG6 Type cable (unassembled).				B. O'Neil/ B. Pitcher/ J. Hsia	Non-infringement
RPX-56	Admitted	Physical sample of F Male Connector for RG6 Plenum Type cable (unassembled).				B. O'Neil/ B. Pitcher/ J. Hsia	Non-infringement
RPX-57	Admitted	Physical sample of F Male Connector for RG6 Quad Plenum Type cable (unassembled).				B. O'Neil/ B. Pitcher/ J. Hsia	Non-infringement

Pre-Hearing Exhibit No.	Status - Received into Evidence	Description	Date	Bates #	Cross Reference	Witness	Purpose
RPX-58	Admitted	Physical sample of F Male Connector for RG6 Dual/Tri/Quad Type cable (unassembled).				B. O'Neil/ B. Pitcher/ J. Hsia	Non-infringement
RPX-59	Admitted	Physical sample of F Male Connector (Gold) for RG6 Dual/Tri/Quad Type cable (unassembled).				B. O'Neil/ B. Pitcher/ J. Hsia	Non-infringement
RPX-60	Admitted	Physical sample of F Male Connector for RG11 Type cable (unassembled).				B. O'Neil/ B. Pitcher/ J. Hsia	Non-infringement
RPX-61	Admitted	Physical sample of F Right Angle Male Connector for RG59 PVC, Siamese & Plenum Type cable (unassembled).				B. O'Neil/ B. Pitcher/ J. Hsia	Non-infringement
RPX-62	Admitted	Physical sample of F Right Angle Male Connector for RG6 Type cable (unassembled).				B. O'Neil/ B. Pitcher/ J. Hsia	Non-infringement
RPX-63	Admitted	Physical sample of F Right Angle Male Connector for RG6 Plenum Type cable (unassembled).				B. O'Neil/ B. Pitcher/ J. Hsia	Non-infringement
RPX-64	Admitted	Physical sample of F Right Angle Male Connector for RG6 Quad Plenum Type cable (unassembled).				B. O'Neil/ B. Pitcher/ J. Hsia	Non-infringement
RPX-65	Admitted	Physical sample of F Right Angle Male Connector for RG6 Dual/Tri/Quad Type cable (unassembled).				B. O'Neil/ B. Pitcher/ J. Hsia	Non-infringement
RPX-66	Admitted	Physical sample of F Female Connector for RG59 PVC, Siamese & Plenum Type cable (unassembled).				B. O'Neil/ B. Pitcher/ J. Hsia	Non-infringement
RPX-67	Admitted	Physical sample of F Female Connector for RG6 Type cable (unassembled).				B. O'Neil/ B. Pitcher/ J. Hsia	Non-infringement
RPX-68	Admitted	Physical sample of F Female Connector for RG6 Plenum Type cable (unassembled).				B. O'Neil/ B. Pitcher/ J. Hsia	Non-infringement
RPX-69	Admitted	Physical sample of F Female Connector for RG6 Quad				B. O'Neil/ B.	Non-infringement

Pre-Hearing Exhibit No.	Status - Received into Evidence	Description	Date	Bates #	Cross Reference	Witness	Purpose
		Plenum Type cable (unassembled).				Pitcher/ J. Hsia	
RPX-70	Admitted	Physical sample of F Female Connector for RG6 Dual/Tri/Quad Type cable (unassembled).				B. O'Neil/ B. Pitcher/ J. Hsia	Non-infringement
RPX-71	Admitted	Physical sample of BNC Male Connector for RG59 PVC, Siamese & Plenum Type cable (unassembled).				B. O'Neil/ B. Pitcher/ J. Hsia	Non-infringement
RPX-72	Admitted	Physical sample of BNC Male Connector for RG6 Type cable (unassembled).				B. O'Neil/ B. Pitcher/ J. Hsia	Non-infringement
RPX-73	Admitted	Physical sample of BNC Male Connector for RG6 Plenum Type cable (unassembled).				B. O'Neil/ B. Pitcher/ J. Hsia	Non-infringement
RPX-74	Admitted	Physical sample of BNC Male Connector for RG6 Quad Plenum Type cable (unassembled).				B. O'Neil/ B. Pitcher/ J. Hsia	Non-infringement
RPX-75	Admitted	Physical sample of BNC Male Connector for RG6 Dual/Tri/Quad Type cable (unassembled).				B. O'Neil/ B. Pitcher/ J. Hsia	Non-infringement
RPX-76	Admitted	Physical sample of BNC Male Connector (Gold) for RG6 Dual/Tri/Quad Type cable (unassembled).				B. O'Neil/ B. Pitcher/ J. Hsia	Non-infringement
RPX-77	Admitted	Physical sample of BNC Male Connector for RG58 Type cable, Belden 8240 (unassembled).				B. O'Neil/ B. Pitcher/ J. Hsia	Non-infringement
RPX-78	Admitted	Physical sample of BNC Male Connector for RG59 Type cable, 23 AWG, Beldon 8241 (unassembled).				B. O'Neil/ B. Pitcher/ J. Hsia	Non-infringement
RPX-79	Admitted	Physical sample of BNC Right Angle Male Connector for RG59 PVC, Siamese & Plenum Type cable (unassembled).				B. O'Neil/ B. Pitcher/ J. Hsia	Non-infringement
RPX-80	Admitted	Physical sample of BNC Right Angle Male Connector for RG6 Type cable (unassembled).				B. O'Neil/ B. Pitcher/ J.	Non-infringement

Pre-Hearing Exhibit No.	Status - Received into Evidence	Description	Date	Bates #	Cross Reference	Witness	Purpose
						Hsia	
RPX-81	Admitted	Physical sample of BNC Right Angle Male Connector for RG6 Plenum Type cable (unassembled).				B. O'Neil/ B. Pitcher/ J. Hsia	Non-infringement
RPX-82	Admitted	Physical sample of BNC Right Angle Male Connector for RG6 Quad Plenum Type cable (unassembled).				B. O'Neil/ B. Pitcher/ J. Hsia	Non-infringement
RPX-83	Admitted	Physical sample of BNC Right Angle Male Connector for RG6 Dual/Tri/Quad Type cable (unassembled).				B. O'Neil/ B. Pitcher/ J. Hsia	Non-infringement
RPX-84	Admitted	Physical sample of BNC Female Connector for RG59 PVC, Siamese & Plenum Type cable (unassembled).				B. O'Neil/ B. Pitcher/ J. Hsia	Non-infringement
RPX-85	Admitted	Physical sample of BNC Female Connector for RG6 Type cable (unassembled).				B. O'Neil/ B. Pitcher/ J. Hsia	Non-infringement
RPX-86	Admitted	Physical sample of BNC Female Connector for RG6 Plenum Type cable (unassembled).				B. O'Neil/ B. Pitcher/ J. Hsia	Non-infringement
RPX-87	Admitted	Physical sample of BNC Female Connector for RG6 Quad Plenum Type cable (unassembled).				B. O'Neil/ B. Pitcher/ J. Hsia	Non-infringement
RPX-88	Admitted	Physical sample of BNC Female Connector for RG6 Type cable (unassembled).				B. O'Neil/ B. Pitcher/ J. Hsia	Non-infringement
RPX-89	Admitted	Physical sample of RCA Male Connector for RG59 PVC, Siamese & Plenum Type cable (unassembled).				B. O'Neil/ B. Pitcher/ J. Hsia	Non-infringement
RPX-90	Admitted	Physical sample of RCA Male Connector for RG6 Type cable (unassembled).				B. O'Neil/ B. Pitcher/ J. Hsia	Non-infringement
RPX-91	Admitted	Physical sample of RCA Male Connector for RG6 Plenum Type cable (unassembled).				B. O'Neil/ B. Pitcher/ J. Hsia	Non-infringement

Pre-Hearing Exhibit No.	Status - Received into Evidence	Description	Date	Bates #	Cross Reference	Witness	Purpose
RPX-92	Admitted	Physical sample of RCA Male Connector for RG6 Quad Plenum Type cable (unassembled).				B. O'Neil/ B. Pitcher/ J. Hsia	Non-infringement
RPX-93	Admitted	Physical sample of RCA Male Connector for RG6 Dual/Tri/Quad Type cable (unassembled).				B. O'Neil/ B. Pitcher/ J. Hsia	Non-infringement
RPX-94	Admitted	Physical sample of RCA Male Connector (Gold) for RG6 Dual/Tri/Quad Type cable (unassembled).				B. O'Neil/ B. Pitcher/ J. Hsia	Non-infringement
RPX-95	Admitted	Physical sample of RCA Right Angle Male Connector for RG59 PVC, Siamese & Plenum Type cable (unassembled).				B. O'Neil/ B. Pitcher/ J. Hsia	Non-infringement
RPX-96	Admitted	Physical sample of RCA Right Angle Male Connector for RG6 Type cable (unassembled).				B. O'Neil/ B. Pitcher/ J. Hsia	Non-infringement
RPX-97	Admitted	Physical sample of RCA Right Angle Male Connector for RG6 Plenum Type cable (unassembled).				B. O'Neil/ B. Pitcher/ J. Hsia	Non-infringement
RPX-98	Admitted	Physical sample of RCA Right Angle Male Connector for RG6 Quad Plenum Type cable (unassembled).				B. O'Neil/ B. Pitcher/ J. Hsia	Non-infringement
RPX-99	Admitted	Physical sample of RCA Right Angle Male Connector for RG6 Dual/Tri/Quad Type cable (unassembled).				B. O'Neil/ B. Pitcher/ J. Hsia	Non-infringement
RPX-100	Admitted	Physical sample of RCA Female Connector for RG59 PVC, Siamese & Plenum Type cable (unassembled).				B. O'Neil/ B. Pitcher/ J. Hsia	Non-infringement
RPX-101	Admitted	Physical sample of RCA Female Connector for RG6 Type cable (unassembled).				B. O'Neil/ B. Pitcher/ J. Hsia	Non-infringement
RPX-102	Admitted	Physical sample of RCA Female Connector for RG6 Plenum Type cable (unassembled).				B. O'Neil/ B. Pitcher/ J. Hsia	Non-infringement

Pre-Hearing Exhibit No.	Status - Received into Evidence	Description	Date	Bates #	Cross Reference	Witness	Purpose
RPX-103	Admitted	Physical sample of RCA Female Connector for RG6 Quad Plenum Type cable (unassembled).				B. O'Neil/ B. Pitcher/ J. Hsia	Non-infringement
RPX-104	Admitted	Physical sample of RCA Female Connector for RG6 Dual/Tri/Quad Type cable (unassembled).				B. O'Neil/ B. Pitcher/ J. Hsia	Non-infringement
RPX-105	Withdrawn	Physical samples of locking members of the accused products prior to assembly.			Exhibit GFC 19, J. Hsia Deposition Exhibit C to Declaration of J. Hsia in Support of Respondents' Joint Motion for Summary Determination	Self-Authenticating/ J. Hsia/ B. Pitcher/ B. O'Neil	Non-infringement
RPX-106	Withdrawn	Physical samples of locking members of the accused products prior to assembly.			Exhibit GFC 20, J. Hsia Deposition Exhibit D to Declaration of J. Hsia in Support of Respondents' Joint Motion for Summary Determination	Self-Authenticating/ J. Hsia/ B. Pitcher/ B. O'Neil B. O'Neil/ B. Pitcher/ J. Hsia	Non-infringement
RPX-107	Withdrawn	Physical sample of accused product F-Connector cut-away.				B. O'Neil/ B. Pitcher/ J. Hsia	Non-infringement
RPX-108	Admitted	Envelope with handwriting containing 2 GEM connectors					Non-infringement Patent misuse Equitable estoppel
RDX-1	Withdrawn	Claim Construction Chart				C. Eldering/ T. Osswald/ B. Pitcher/ B. O'Neil/ J. Hsia	
RDX-2	Withdrawn	Non-infringement Chart			Attachment to	C. Eldering/	Non-infringement

Pre-Hearing Exhibit No.	Status - Received into Evidence	Description	Date	Bates #	Cross Reference	Witness	Purpose
					Response to Complaint filed by Respondent Fu Ching	T. Osswald/ B. Pitcher/ B. O'Neil/ J. Hsia	
RDX-3	Withdrawn	§ 102 Invalidity Chart			Ex. A to Respondent Gem Electronics' Supplemental Responses to Complainant's First Set of Interrogatories, Nos. 6(a), 23 – 26 and 28 Ex. A to Respondent Fu Ching's Supplemental Responses to Complainant's First Set of Interrogatories, Nos. 23 – 26 and 28	C. Eldering/ T. Osswald/ B. Pitcher/ B. O'Neil/ J. Hsia	Invalidity
RDX-4	Withdrawn	§ 103 Invalidity Chart			Ex. B to Respondent Gem Electronics' Supplemental Responses to Complainant's First Set of Interrogatories, Nos. 6(a), 23 – 26 and 28 Ex. B to Respondent Fu Ching's Supplemental Responses to Complainant's First Set of Interrogatories,	C. Eldering/ T. Osswald/ B. Pitcher/ B. O'Neil/ J. Hsia	Invalidity

Pre-Hearing Exhibit No.	Status - Received into Evidence	Description	Date	Bates #	Cross Reference	Witness	Purpose
					Nos. 23 – 26 and 28		

UNITED STATES INTERNATIONAL TRADE COMMISSION
Washington, D.C.

Before E. James Gildea
Administrative Law Judge

In the Matter of CERTAIN COAXIAL CABLE CONNECTORS AND COMPONENTS OF THE SAME AND PRODUCTS CONTAINING THE SAME	Inv. No. 337-TA-650

COMMISSION INVESTIGATIVE STAFF'S FINAL EXHIBIT LIST

(July 16, 2009)

Exhibit No.	Description	Witness	Purpose	Status of Receipt
SX-1	No exhibit SX-1			
SX-2	Demonstrative Exhibit Infringement (PPC-Trial-005090-A)	Osswald	Infringement	Received; July 9, 2009 (Tr. 1039)

Respectfully submitted,

s/ Kevin Baer

Lynn I. Levine, Director
T. Spence Chubb, Supervisory Attorney
Kevin Baer, Investigative Attorney
OFFICE OF UNFAIR IMPORT INVESTIGATIONS
U.S. International Trade Commission
500 E Street, SW., Suite 401
Washington, D.C. 20436
(202) 205-2221
(202) 205-2158 (Facsimile)

July 16, 2009

IN THE MATTER OF CERTAIN COAXIAL CABLE CONNECTORS AND COMPONENTS THEREOF AND PRODUCTS CONTAINING SAME **337-TA-650**

CERTIFICATE OF SERVICE

I, Marilyn R. Abbott, hereby certify that the attached **INITIAL DETERMINATION** has been served upon, **Kevin Baer, Esq.,** Commission Investigative Attorney, and the following parties via first class mail and air mail where necessary on November 4, **2009.**

Marilyn R. Abbott

Marilyn R. Abbott, Secretary
U.S. International Trade Commission
500 E Street, S.W., Room 112A
Washington, DC 20436

FOR COMPLAINANT JOHN MEZZALINGUA ASSOCIATES, INC., d/b/a PPC, INC.

Patrick D. Gill, Esq. **RODE & QUALEY** 55 W. 39th Street New York, NY 10018	( )Via Hand Delivery (✓)Via Overnight Mail ( )Via First Class Mail ( )Other:_____
James. R. Muldoon, Esq. **MARJAMA BLASIAK & SULLIVAN, LLP** 250 South Clinton Street, Suite 300 Syracuse, NY 13202	( )Via Hand Delivery (✓)Via Overnight Mail ( )Via First Class Mail ( )Other:_____
James Hwa **LOCKE LORD BISSELL & LIDDELL LLP** 401 9th Street NW, Suite 400 Washington, DC 20004	( )Via Hand Delivery (✓)Via Overnight Mail ( )Via First Class Mail ( )Other:_____
John F. Sweeney Steven F. Meyer **LOCKE LORD BISSELL & LIDDELL LLP** 3 World Financial Center New York, NY 10281-2101	( )Via Hand Delivery (✓)Via Overnight Mail ( )Via First Class Mail ( )Other:_____

IN THE MATTER OF CERTAIN COAXIAL CABLE CONNECTORS AND COMPONENTS THEREOF AND PRODUCTS CONTAINING SAME **337-TA-650**

FOR RESPONDENT GEM ELECTRONICS & FU CHING TECHNICAL INDUSTRIAL CO., LTD.

John R. Horvack, Jr., Esq.
Sherwin M. Yoder, Esq.
CARMODY & TORRANCE, LLP
195 Church Street
New Haven, CT 06509

( )Via Hand Delivery
(✓)Via Overnight Mail
( )Via First Class Mail
( )Other:_____

IN THE MATTER OF CERTAIN COAXIAL CABLE CONNECTORS AND COMPONENTS THEREOF AND PRODUCTS CONTAINING SAME **337-TA-650**

PUBLIC MAILING LIST

Heather Hall
LEXIS - NEXIS
9443 Springboro Pike
Miamisburg, OH 45342

( )Via Hand Delivery
(✓)Via Overnight Mail
( )Via First Class Mail
( )Other:_____

Kenneth Clair
Thomson West
1100 – 13th Street NW
Suite 200
Washington, DC 20005

( )Via Hand Delivery
(✓)Via Overnight Mail
( )Via First Class Mail
( )Other:_____